Caddy 1996 , Polo Classic 1996 ➤

Simos injection and ignition system

Engine ID	AFT								

Edition 11.1995

Protected by copyright. Copying for private or commercial purposes, in part or in whole, is not permitted unless authorised by Volkswagen AG. Volkswagen AG does not guarantee or accept any liability with respect to the correctness of information in this document. Copyright by Volkswagen AG.

satelettronica

List of Workshop Manual Repair GroupsList of Workshop Manual Repair GroupsList of Workshop Manual Repair Groups

Caddy 1996 , Polo Classic 1996 ➤

Simos injection and ignition system

Repair Group

01 - Self diagnosis

24 - Mixture preparation, Injection

28 - Ignition system

Protected by copyright. Copying for private or commercial purposes, in part or in whole, is not permitted unless authorised by Volkswagen AG. Volkswagen AG does not guarantee or accept any liability with respect to the correctness of information in this document. Copyright by Volkswagen AG.

satelletronica

Technical information should always be available to the foremen and mechanics, because their careful and constant adherence to the instructions is essential to ensure vehicle road-worthiness and safety. In addition, the normal basic safety precautions for working on motor vehicles must, as a matter of course, be observed.

All rights reserved.
No reproduction without prior agreement from publisher.

Copyright © 2011 Volkswagen AG, Wolfsburg

00056405320

Contents

01 - Self diagnosis 1

1 **Self diagnosis** 1
1.1 Self diagnosis 1
1.2 Function 1
1.3 Technical data of self diagnosis 1
1.4 Connecting fault reader V.A.G 1551 and selecting engine electronics control unit 2
1.5 Coding Simos control unit 3
1.6 Interrogating and erasing fault memory 4
1.7 Fault table 5
1.8 Final control diagnosis 12
1.9 Read measured value block 15
1.10 Display group overview 15

24 - Mixture preparation, Injection 20

1 **Simos injection and ignition system** 20
1.1 Simos injection and ignition system 20
1.2 Fitting locations overview 20
1.3 Servicing injection part 23
1.4 Dismantling and assembling intake manifold - upper part 30
1.5 Dismantling and assembling intake manifold - lower part 33
1.6 Dismantling and assembling air cleaner 34
1.7 Safety precautions 35
1.8 Rules for cleanliness 35
1.9 Technical data 36
1.10 Idling check 36
1.11 Performing basic setting 37
1.12 Checking Lambda probe and Lambda control 38
1.13 Checking Lambda probe heating 42
1.14 Checking engine operating mode 44
1.15 Checking intake manifold change-over valve 45
1.16 Checking air mass meter 46
1.17 Checking throttle valve control part 48
1.18 Checking coolant temperature sender 55
1.19 Checking intake air temperature sender 57
1.20 Checking engine speed sender 60
1.21 Checking speed signal 61
1.22 Checking control unit voltage supply 63
1.23 Matching engine electronic control unit to electronic immobilizer 65
1.24 Checking air conditioner and air conditioner compressor signals 66
1.25 Checking starter signal 67
1.26 Checking injectors 67
1.27 Checking fuel pressure regulator and holding pressure 70
1.28 Checking intake air system for leaks (unmetered air) 72

28 - Ignition system 73

1 **Simos injection and ignition system** 73
1.1 Simos injection and ignition system 73
1.2 Servicing ignition part 73
1.3 Safety precautions 77
1.4 Test data, spark plugs 77
1.5 Checking position of distributor 77
1.6 Removing and installing distributor 78
1.7 Checking ignition timing control 82
1.8 Checking Hall sender 82

Copyright by Volkswagen AG. Volkswagen AG does not guarantee or accept any liability with respect to the correctness of information in this document.
Reproduced by satelettronica
satelettronica

1.9 Checking knock sensor 83
1.10 Checking ignition transformer and output stage 85

Protected by copyright. Copying for private or commercial purposes, in part or in whole, is not permitted unless authorised by Volkswagen AG. Volkswagen AG does not guarantee or accept any liability with respect to the correctness of information in this document. Copyright by Volkswagen AG.

satelettronica

01 - Self diagnosis

1 - Self diagnosis

1.1 - Self diagnosis

Note:

The self-diagnosis monitors only a part of the injection and ignition system. For fault finding the binder "Fault finding engine" must also be used in every case.

1.2 - Function

The Simos control unit (J361) for the fuel injection and ignition system is equipped with a fault memory.

If faults occur in the sensors and components being monitored, they will be stored in the fault memory together with an indication of the type of fault.

The stored faults are output after initiating the fault display => Page 4 .

This fault memory must be erased once the faults have been eliminated => Page 4 .

A fault relating to the function of the Lambda control system can only be interrogated after a test drive of at least 10 minutes duration.

Faults which can be attributed to a tempory open circuit in the wiring or a loose contact, will also be stored. These faults will be displayed as sporadic faults "SP" and are automatically cancelled if they are not repeated after 50 engine starts.

1.3 - Technical data of self diagnosis

Equipped with

- Fault memory: Non-volatile memory and volatile memory1)
- Rapid data transfer

1) Will be cancelled after 50th engine start if fault has not occurred again.

Control unit identification

=> Page 2 ; connecting fault reader V.A.G 1551 and selecting engine electronics control unit

Selectable functions

Function	Ignition switched on	Engine idling
02 Interrogate fault memory	-	x
03 Final control diagnosis	x	-
04 Introduction of basic setting	x	-

Protected copyright. Copying for private or commercial purposes, in part or in whole, is not permitted unless authorised by Volkswagen AG. Volkswagen AG does not guarantee or accept any liability with respect to the correctness of information in this document. Copyright by Volkswagen AG.
satelettronica

05 Erase fault memory	-	x
06 End output	x	x
07 Code control unit	x	-
08 Read measured value block	x	x
10 Adaption	x	-

1.4 - Connecting fault reader V.A.G 1551 and selecting engine electronics control unit

Special tools, testers and auxiliary items

- Fault reader V.A.G 1551 with cable V.A.G 1551/3

Note:

The vehicle system tester V.A.G 1552 can be used instead of the fault reader V.A.G 1551, however a print-out is not possible.

Test conditions

- Fuse 21 OK.
- Battery voltage at least 11 V
- Earth connections on engine and gearbox OK.
  (Earth connection engine: =>Page 22 , Item 18).

Work sequence

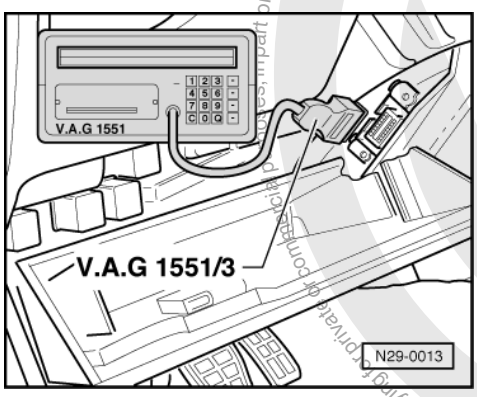

- -> Fold down left shelf.
- Connect fault reader (or vehicle system tester) with cable V.A.G 1551/3.
- Depending upon desired function:
  Switch on ignition
  or
  Start engine => Page 1 , Table "Selectable functions".

Notes:

- If the display does not indicate as described in the work sequence:

=> Fault reader operating instructions

- If due to an input fault "Fault in the data transfer!" is displayed, pull wire off fault reader, reconnect and repeat work step.

- Operate fault reader taking into account the information on the display:
- Press key 1 for "Rapid data transfer".

Protected by copyright. Copying for private or commercial purposes, in part or in whole, is not permitted unless authorised by Volkswagen AG. Volkswagen AG does not guarantee or accept any liability with respect to the correctness of information in this document. Copyright by Volkswagen AG.
satelettronica

- Press keys 0 and 1 for address word "Engine electronics" and confirm entry with Q key.

-> The fault reader V.A.G 1551 display will show the control unit identification, e.g.:

```
6K0 906 025      SIMOS 4S2      3402
Coding 00000      WSC XXXXX
```

- 6K0 906 025 = Part No. of the control unit (for latest control unit version see parts catalogue)
- SIMOS 4S2 = System designation (4S) and version (2)
- 3402 = Programme level number
- Coding 00000 = Coding variants
- WSC = Workshop code

If the coding differs from the vehicle version, then:

- Check control unit coding => Page 3 , Coding Simos control unit
- Press ⇒key.

-> Indicated on display:

```
Rapid data transfer      HELP
Select function XX
```

- Further measures see repair procedures.

1.5 - Coding Simos control unit

If the appropriate code for the vehicle is not displayed or if the control unit has been renewed, the control unit must be coded as follows.

Special tools, testers and auxiliary items

- Fault reader V.A.G 1551 or vehicle system tester V.A.G 1552 with cable V.A.G 1551/3

Work sequence

- Connect fault reader V.A.G 1551 (V.A.G 1552) and select engine electronics control unit with the "Address word" 01. When doing this the ignition must be switched on.
  (Connecting fault reader and selecting engine electronics control unit => Page 2 .)

-> Indicated on display:

```
Rapid data transfer      HELP
Select function XX
```

- Press keys 0 and 7 for the function "Code control unit" and confirm entry with Q key.

-> Indicated on display:

```
Code control unit      Q
Input code number xxxxx (0-32000)
```

- Enter the appropriate code number for this vehicle and confirm with Q key.

Coding	For vehicles with
00000	Manual gearbox

-> The fault reader V.A.G 1551 display will show the control unit identification, e.g.:

```
Coding 0000      WSC XXXXX
```

Protected by copyright. Copying for private or commercial purposes, in part or in whole, is not permitted unless authorised by Volkswagen AG. Volkswagen AG does not guarantee or accept any liability with respect to the correctness of information in this document. Copyright by Volkswagen AG.
satelettronica

Volkswagen AG does not guarantee or accept any liability with respect to the correctness of information in this document. Copyright by Volkswagen AG.
Protected by copyright. Copying for private or commercial purposes, in part or in whole, is not permitted unless authorised by Volkswagen AG.

Note:

If an unauthorized code number is entered, the coding 00000 for vehicles with automatic gearbox will be automatically entered.

- Press ⇒key.

-> Indicated on display:

```
Rapid data transfer      HELP
Select function XX
```

- Press keys 0 and 6 for the function "End output" and confirm entry with the Q key.

Note:

The code unit entered and shown on the display will not be used by the Simos control unit until the ignition has been switched off for at least 15 minutes.

An incorrect coding leads to:

- Engine running faults
- Increased fuel consumption
- Increased emissions
- Faults stored in fault memory which are not actually present
- Reduced gearbox life

1.6 - Interrogating and erasing fault memory

Special tools, testers and auxiliary items

- Fault reader V.A.G 1551 with cable V.A.G 1551/3

Note:

The vehicle system tester V.A.G 1552 can be used instead of the fault reader V.A.G 1551, however a print-out is not possible.

Work sequence

- Connect fault reader V.A.G 1551 (V.A.G 1552) and select engine electronics control unit with the "Address word" 01. When doing this the engine must be running at idling speed.
  (Connecting fault reader and selecting engine electronics control unit => Page 2 .)

Only when engine does not start:

- Interrogate fault memory with ignition switched on.

- Switch on printer with the Print button
  (Warning lamp in button lights up).

-> Indicated on display:

```
Rapid data transfer      HELP
Select function XX
```

- Operate fault reader taking into account the information on the display:
- Press keys 0 and 2 for function "Interrogate fault memory" and confirm entry with Q key.

-> The number of faults stored or "No fault recognised!" will be shown on the display.

```
X Faults recognised!
```

satelettronica

If no fault is stored:

- Press ⇒key.

If one or more faults are stored:

The faults stored will be displayed and printed out one after the other.
Then the display will show:

- Locate and eliminate faults printed out as per fault table => Page 5 .
- Press keys 0 and 5 for the function "Erase fault memory" and confirm entry with Q key.

-> Indicated on display:

```
Rapid data transfer
Fault memory is erased!
```

Note:

If the ignition is switched off between interrogating fault memory and erasing fault memory, the fault memory will not be erased.

- Press ⇒key.

-> Indicated on display:

```
Rapid data transfer      HELP
Select function XX
```

- Press keys 0 and 6 for the function "End output" and confirm entry with the Q key.

Note:

If a fault is present which is not recognised by the self diagnosis, carry out further fault finding using the fault table in "Engine fault finding" binder.

1.7 - Fault table

Notes:

- The fault table is listed according to the 5 digit fault code on the left.
- Explanation of the fault types (e.g. "open circuit/short circuit to earth"):

=> Fault reader operating instructions

- Before renewing components indicated as being faulty, check the wiring and connectors to these components as well as the earth connections using current flow diagram. This is particularly relevant if faults are output as "occurring sporadically" (SP).

Output on V.A.G 1551 printer	Possible causes of fault	Possible effects	Fault remedy
00282 Throttle valve positioner - V60-1)			
Short circuit	- Wiring open circuit or short to earth/positive - V60 defective/sticking	- Cold starting problems - Cold idling problems	- Check V60 =>Page 48 , checking throttle valve control part
Open circuit	- Wiring open circuit - V60 defective/sticking	- Hard load change - Mechanical emergency running (J338) recognized	

Protected by copyright. Copying for private or commercial purposes, in part or in whole, is not permitted unless authorised by Volkswagen AG. Volkswagen AG does not guarantee or accept any liability with respect to the correctness of information in this document. Copyright by Volkswagen AG.
satelettronica

Output on V.A.G 1551 printer	Possible causes of fault	Possible effects	Fault remedy
Mechanical fault	- V60 defective/sticking		
Connectors	- Cables interchanged		

1) The throttle valve positioner V60 is a component of the throttle valve control part J338.

V.A.G 1551 print-out	Possible causes of fault	Possible effects	Fault remedy
00513 Engine speed sender -G28 Signal outside tolerance	- Gap speed sender/sender wheel too large - Metal particles on G28 or retaining base loose - Sender wheel loose	- Engine will not start	- Check G28 for tight fit/metal particles => Page 28 , item 26 - Check sender wheel for tight fit: => Repair group 13; Dismantling and assembling cylinder block, crankshaft and flywheel
	- Wiring open circuit or short circuit - Loose contact		- Check G28=> Page 60
	- G28 defective		- Replace G28 => Page 28 , item 26

V.A.G 1551 print-out	Possible causes of fault	Possible effects	Fault remedy
00515 Hall sender -G40 Signal outside tolerance	- G40 defective - Wiring open circuit - Wire has short to positive - Wire has short to earth - Loose contact	- Governed speed approx. 5000 rpm - Reduced performance - Poor starting - High fuel consumption	- Check G40 => Page 82
	- TDC marking not aligned at distributor - Distributor loose / turned		- Check distributor setting => Page 77

V.A.G 1551 print-out	Possible causes of fault	Possible effects	Fault remedy
00516 Idling switch -F601) implausible signal	- F60 defective	- Engine running problems when pulling away - Engine running problems during transfer from idling/ overrun to part load	- Check F60 =>Page 48 , checking throttle valve control part
Open circuit	- Wiring open circuit		
Short to earth	- Short to earth		
	- Short to positive		

1) The idling switch F60 is a component of the throttle valve control part J338.

V.A.G 1551 print-out	Possible causes of fault	Possible effects	Fault remedy
00518 Throttle valve potentiometer -G691)	- G69 defective		

satelettronica

V.A.G 1551 print-out	Possible causes of fault	Possible effects	Fault remedy
Short to earth	- Wiring open circuit - Wire has short to earth	- Hard load change	- Check G69 =>Page 48 , checking throttle valve control part
Open circuit/short to positive	- Wiring open circuit in earth wire - Wire has short to positive - G69 defective		
implausible signal	- Loose contact - G69 defective		

1) The throttle valve potentiometer G69 is a component of the throttle valve control part J338.

Output on V.A.G 1551 printer	Possible causes of fault	Possible effects	Fault remedy
00520 Air mass/flow meter -G70/G19 Open circuit/short to positive	- Wiring open circuit or short to positive - G70 defective	- Engine running problems	- Check G70 =>Page 46
Open circuit/short to earth	- Wiring open circuit or short to earth - G70 defective		

V.A.G 1551 print-out	Possible causes of fault	Possible effects	Fault remedy
00522 Coolant temperature sender -G62 Short to earth	- Wire has short to earth - G62 defective	- Poor cold starting - Poor hot starting	- Check G62 =>Page 55
Open circuit/short to positive	- Wiring open circuit - Wire has short to positive - G62 defective		
implausible signal	- G62 defective		

Output on V.A.G 1551 printer	Possible causes of fault	Possible effects	Fault remedy
00523 Intake air temperature sender -G42 Short to earth	- Wire has short to earth - G42 defective	- Poor hot starting	- Check G42=>Page 57
Open circuit/short to positive	- Wiring open circuit or short to positive - G42 defective		

V.A.G 1551 print-out	Possible causes of fault	Possible effects	Fault remedy
00524 Knock sensor 1 -G61 no signal	- Wiring open circuit or short to earth - No knock recognition from Simos control unit (J361)	- Reduced performance - High fuel consumption	- Check G61 => Page 83
	- G61 defective		- Replace G61 => Page 74 , item 7

Protected by copyright. Copyright by Volkswagen AG. Volkswagen AG does not guarantee or accept any liability with respect to the correctness of information in this document. Copyright by Volkswagen AG. Protected by copyright. Copying for private or commercial purposes, in part or in whole, is not permitted unless authorised by Volkswagen AG.
satelettronica

V.A.G 1551 print-out	Possible causes of fault	Possible effects	Fault remedy
signal too large	- No knock recognition from Simos control unit (J361)		- If necessary replace J361, => Page 25 , item 9
	- G61 defective		- Replace G61 => Page 74 , item 7

V.A.G 1551 print-out	Possible causes of fault	Possible effects	Fault remedy
00525 Lambda probe -G39 no signal	- Wiring open circuit or short to positive - G39 defective	- No Lambda control - Fuel smell	- Check Lambda probe and Lambda control =>Page 38
Open circuit/short to earth	- Wiring open circuit or short to earth - G39 defective		
Short to positive	- Wiring open circuit or short to positive - G39 defective		
signal too small	- Lambda probe heating defective		- Check Lambda probe heating=> Page 42
implausible signal	- G39 defective		

V.A.G 1551 print-out	Possible causes of fault	Possible effects	Fault remedy
00530 Throttle valve positioner/potentiometer -G881) Open circuit/short to earth	- Wiring open circuit or short to earth - G88 defective	- Cold starting problems - Cold idling problems - Hard load change - mech. emergency running (J338) recognized - Rough idling	- Check G88 =>Page 48 , checking throttle valve control part
Open circuit/short to positive	- Wiring open circuit in earth wire - Wire has short to positive - G88 defective		
implausible signal	- Connector incorrectly wired		
Control difference	- G88 defective		
Control limit exceeded			

1) The throttle valve positioner/potentiometer G88 is a component of the throttle valve control part J338.

V.A.G 1551 print-out	Possible causes of fault	Possible effects	Fault remedy
00532 Supply voltage Signal too large	- Battery voltage - exceeds 23.9 V	- Engine running problems	- Check alternator: => Current flow diagrams, Electrical fault finding and Fitting locations binder

Copyright by Volkswagen AG. Volkswagen AG does not guarantee or accept any liability with respect to the correctness of information in this document. Copyright by Volkswagen AG. Reproduction or publication in whole or in part is not permitted unless authorised by Volkswagen AG for commercial purposes.
satelettronica

V.A.G 1551 print-out	Possible causes of fault	Possible effects	Fault remedy
Signal too small	- Battery voltage - less than 6.3 V - Poor earth connection		- Check battery Check earth connections => Current flow diagrams, Electrical fault finding and Fitting locations binder

V.A.G 1551 print-out	Possible causes of fault	Possible effects	Fault remedy
00533 Idling control Lower limit value	- Throttle valve positioner (V60) sticking - Unmetered air to throttle valve - Injector defective	- Engine running problems - High fuel consumption - Fuel odours	- Check V60=>Page 72 - Check N30...N33 => Page 67 , Checking injectors
Upper limit value	- Throttle valve positioner (V60) sticking - Air filter blocked		- Check air filter, renew if necessary

V.A.G 1551 print-out	Possible causes of fault	Possible effects	Fault remedy
00537 Lambda control upper limit value	- Short to earth - Injector defective (blocked) - Fuel pressure regulator defective - Fuel pump defective - Fuel tank empty	- No Lambda control - Engine running problems	- Check Lambda probe and Lambda control =>Page 38 - Check N30...N33 => Page 67 , Checking injectors - Check fuel pressure regulator => Page 70 - Check fuel pump => Repair group 20 - Check fuel in fuel tank
lower limit value	- see next page		

V.A.G 1551 print-out	Possible causes of fault	Possible effects	Fault remedy
00537 Lambda control continued Lower limit value	- Activated charcoal filter solenoid valve 1 (N80) leaking/ sticking - Injector defective (not closing completely) - Fuel pressure regulator defective		- Check N80 => Page 12 , Final control diagnosis - Check N30...N33 => Page 67 , Checking injectors - Check fuel pressure regulator => Page 70

V.A.G 1551 print-out	Possible causes of fault	Possible effects	Fault remedy
00546 Data wire defective Short to positive	- Short to positive	- No effects	- Check wire from control unit to diagnostic connector according to current flow diagram: => Current flow diagrams, Electrical fault finding and Fitting locations binder

Output on V.A.G 1551 printer	Possible causes of fault	Possible effects	Fault remedy
00624			

satelettronica

Output on V.A.G 1551 printer	Possible causes of fault	Possible effects	Fault remedy
Air conditioner compressor cut-in Short to positive	- Wiring open circuit or short to positive	- Hard load changes at small throttle valve angles - Rough idling - Idling speed drops when switching air conditioner on	- Check air conditioner relay: Check wiring to air conditioner: => Current flow diagrams, Electrical fault finding and Fitting locations binder
00625 Speed signal Signal outside tolerance	- No signal from speedometer (G21) or speedometer sender (G22)	- Speedometer not indicating correctly - Increased idling speed - Engine running problems	- Check signal from G21/ G22 =>Page 61, checking speed signal
Output on V.A.G 1551 printer	**Possible causes of fault**	**Possible effects**	**Fault remedy**
00635 Lambda probe heating before Catalyst Open circuit/short to positive	- Wiring open circuit/ short to positive - G39 defective	- Fuel smell	- Check Lambda probe heating =>Page 42 - Check wiring for short to positive/earth: => Current flow diagrams, Electrical fault finding and Fitting locations binder
Short to earth	- Short to earth - G39 defective		

Output on V.A.G 1551 printer	Possible causes of fault	Possible effects	Fault remedy
01243 Intake manifold change-over valve -N156 Open/short circuit to earth	- Wire open/short circuit to earth - N156 defective	- Hard governor control caused by switching injectors off at approx. 6500 rpm - Acceleration problems	- Check activation => Page 12 , Final control diagnosis
Short to positive	- Short to positive - N156 defective		

Output on V.A.G 1551 printer	Possible causes of fault	Possible effects	Fault remedy
01247 Activated charcoal filter solenoid valve 1 -N80 Signal to positive	- Wiring has short to positive - N80 defective	- Rough idling - Fuel smell	- Check N80 => Page 12 , final control diagnosis
Open circuit/short to positive	- Wiring open circuit/ short to positive - N80 defective		
V.A.G 1551 print-out	**Possible causes of fault**	**Possible effects**	**Fault remedy**
01249 No.1 cyl. injector -N30			

Protected by copyright. Copying or distribution of this document, or communication of its contents to others, not permitted unless authorised by Volkswagen AG. Volkswagen AG does not guarantee or accept any liability with respect to the correctness of information in this document. Copyright by Volkswagen AG.

satelettronica

Output on V.A.G 1551 printer	Possible causes of fault	Possible effects	Fault remedy
Open circuit/short to positive	- Wiring open circuit or short to positive - N30 defective	- Poor starting - Poor performance - Engine will not start	- Check N30...N33 => Page 67 , checking injectors
Short to earth	- Short to earth - N30 defective		
01250 No. 2 cyl. injector -N31 Open circuit/short to positive	=> No. 1 Cyl., fault code 01249	=> No. 1 Cyl., fault code 01249	=> No. 1 Cyl., fault code 01249
Short to earth			
Output on V.A.G 1551 printer	**Possible causes of fault**	**Possible effects**	**Fault remedy**
01251 No. 3 cyl. injector -N32 Open circuit/short to positive	=> No. 1 Cyl., fault code 01249	=> No. 1 Cyl., fault code 01249	=> No. 1 Cyl., fault code 01249
Short to earth			
01252 No. 4 cyl. injector -N33 Open circuit/short to positive	=> No. 1 Cyl., fault code 01249	=> No. 1 Cyl., fault code 01249	=> No. 1 Cyl., fault code 01249
Short to earth			
Output on V.A.G 1551 printer	**Possible causes of fault**	**Possible effects**	**Fault remedy**
01259 Fuel pump relay -J17 Short to positive	- Short to positive	- Engine will not start	- Check J17 => Page 12 , final control diagnosis

Output on V.A.G 1551 printer	Possible causes of fault	Possible effects	Fault remedy
17978 Engine control unit blocked	- Attempted manipulation - Short in the communication wire - Incorrect coding - Immobilizer control unit defective/missing	- Engine will not start	- Match engine electronic control unit to the electronic immobilizer => Page 65 - Check electronic immobilizer: => Repair group 96; Servicing electronic immobilizer
Output on V.A.G 1551 printer	**Possible causes of fault**	**Possible effects**	**Fault remedy**
65535 Control unit defective defective	- Control unit internally defective	- Engine running problems - Engine will not start	- Renew J361 if necessary, => Page 25 , item 9

Protected by copyright. Copyright by Volkswagen AG. Volkswagen AG does not guarantee or accept any liability with respect to the correctness of information in this document. Copyright by Volkswagen AG. Protected by copyright. Copying for private or commercial purposes, in part or in whole, is not permitted unless authorised by Volkswagen AG.
satelettronica

1.8 - Final control diagnosis

The final control diagnosis activates the following components in the stated sequence:

1. Fuel pump relay (J17)
2. Activated charcoal filter solenoid valve 1 (N80)
3. Intake manifold change-over valve (N156), (two-way valve)

Special tools, testers and auxiliary items

- Fault reader V.A.G 1551 with cable V.A.G 1551/3
- Test box V.A.G 1598/18
- Adapter set V.A.G 1594
- Diode test lamp V.A.G 1527
- Current flow diagram

Test conditions

- Fuse 15,18 and 21 OK.

Work sequence

- Connect fault reader V.A.G 1551 (V.A.G 1552) and select engine electronics control unit with the "Address word" 01. When doing this the ignition must be switched on.
  (Connecting fault reader and selecting engine electronics control unit => Page 2 .)

-> Indicated on display:

```
Rapid data transfer      HELP
Select function XX
```

- Operate fault reader taking into account the information on the display:
- Press keys 0 and 3 for the function "Final control diagnosis".

-> Indicated on display:

```
Rapid data transfer      Q
03 Final control diagnosis
```

Activating fuel pump relay (J17):

- Confirm input with Q key.

-> Indicated on display:

```
Final control diagnosis
Fuel pump relay J17
```

The fuel pump relay (on the relay plate with fuse box, relay position 12) must click until switching to the next final control by pressing the ⇒button.

Note:

During the activation of the fuel pump relay the fuel pump must be heard to run at intervals.

If the relay does not click:

- Check fuel pump relay:

=> Current flow diagrams, Electrical fault finding and Fitting locations, Fuel supply system.

Protected by copyright. Copyright by Volkswagen AG. Volkswagen AG does not guarantee or accept any liability with respect to the correctness of information in this document. Copyright by Volkswagen AG. This document is not to be reproduced and unless authorised by Volkswagen AG. Volkswagen AG does not guarantee or accept any liability with respect to the correctness of information in this document. Copyright by Volkswagen AG. For private or commercial purposes, in part or in whole, is not permitted unless authorised by Volkswagen AG. Volkswagen AG does not guarantee or accept any liability with respect to the correctness of information in this document. Copyright by Volkswagen AG.

satelettronica

Activating activated charcoal filter solenoid valve 1 (N80):

Test conditions

- Fuse 15 OK.

- Press ⇒key.

-> Indicated on display:

```
Final control diagnosis
Solenoid valve 1 for activated charcoal
filter N80
```

The activated charcoal filter solenoid valve 1 (under air cleaner housing) must click until the next final control element is selected by pressing the ⇒ button.

The valve clicks but a fault is still suspected (valve does not open or close):

- Remove air filter.
- Pull hose off solenoid valve (from activated charcoal filter).
- Connect auxiliary hose.
- During final control diagnosis blow into auxiliary hose (in direction of throttle housing).
  Valve must open and close

If the solenoid valve does not click:

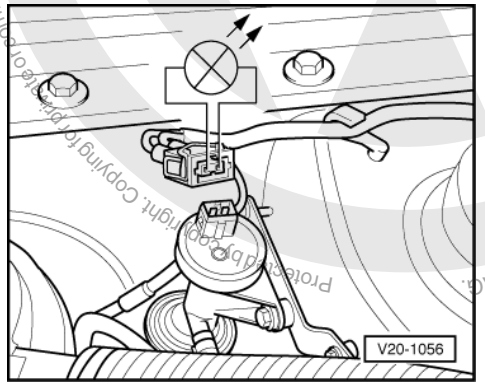

- -> Pull 2 pin connector off valve and connect diode test lamp V.A.G 1527 with aux. cables from V.A.G 1594 to disconnected connector.
  The LED must flash

LED flashes:

- Renew solenoid valve.

LED does not flash:

- Switch off ignition.

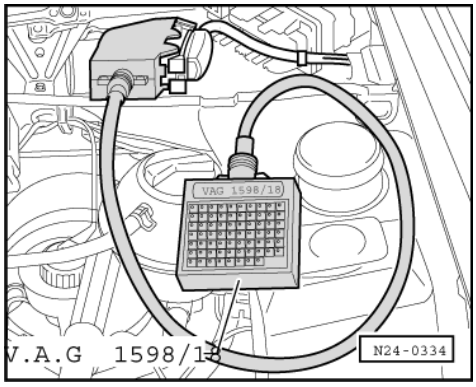

satelettronica

- -> Connect test box V.A.G 1598/18 to control unit wiring loom -arrow-.
- Check wire between test box socket 33+2 pin connector contact 1 for open circuit according to current flow diagram.
  Wire resistance: Max. 1.5 ω

If no fault in wire is detected:

- Check solenoid valve voltage supply according to current flow diagram, if necessary renew Simos control unit (J361).

Activate intake manifold change-over valve (N156):

- Press ⇒key.

-> Indicated on display:

```
Final control diagnosis
Intake manifold change-over valve -N156
```

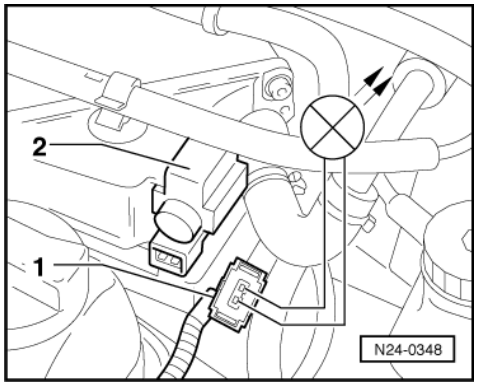

- -> Pull 2 pin connector -1- off valve -2- and connect diode test lamp V.A.G 1527 with aux. cables from V.A.G 1594 to disconnected connector.
  The LED must flash

LED does not flash:

- Switch off ignition.

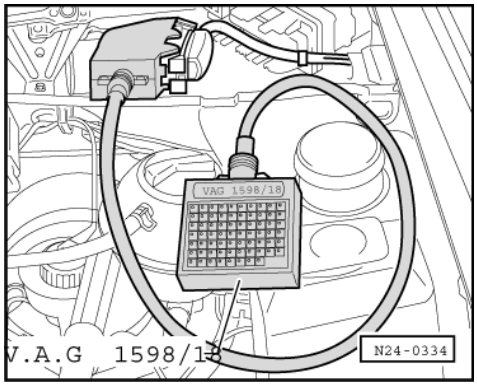

- -> Connect test box V.A.G 1598/18 to control unit wiring loom -arrow-.
- Check wire between test box socket 22 and 2 pin connector contact 2 for open circuit according to current flow diagram.
  Wire resistance: Max. 1.5 ω

If no fault in wire is detected:

- Check intake manifold change-over valve (N156) voltage supply according to current flow diagram. 2 pin connector contact 1 and vehicle earth.
  Specification: min. 11 V

Copyright by Volkswagen AG. Volkswagen AG does not guarantee or accept any liability with respect to the correctness of information in this document. Copyright by Volkswagen AG. Protected by copyright. Copying for private or commercial purposes, in part or in whole, is not permitted unless authorised by Volkswagen AG.
satelettronica

If the voltage supply is OK and no fault is present in the wiring:

- Check intake manifold change-over valve => Page 45 .
- Press ⇒key.

Note:

After completion of the final control diagnosis input 06 for "End output" function and confirm with Q.

- Switch off ignition.

1.9 - Read measured value block

- Connect fault reader V.A.G 1551 (V.A.G 1552) and select engine electronics control unit with the "Address word" 01. When doing this the engine must be running at idling speed.
  (Connecting fault reader and selecting engine electronics control unit => Page 2 .)

-> Indicated on display:

```
Rapid data transfer      HELP
Select function XX
```

- Press keys 0 and 8 for the function "Read measured value block" and confirm entry with Q key.

-> Indicated on display:

```
Read measured value block     HELP
Input display group number XX
```

- Enter relevant display group number and confirm entry with Q key.

Note:

To change to another display group proceed as follows:

Display group	V.A.G 1551	V.A.G 1552
Higher	Press key 3	Press ↑key
Lower	Press key 1	Press ↓key
Skip	Press key C	Press key C

Test conditions

- Vehicle stationary, engine idling
- Engine oil temperature min. 80 °C
- Electrical consumers switched off (radiator fan must not run during the check)
- Air conditioner switched off

1.10 - Display group overview

Evaluation of display group 00 =>Page 17

Display group 00 (decimal displayed value)												
▪ Engine running at idling speed												
Display zones											Specification	Corresponds to
1	2	3	4	5	6	7	8	9	10	Engine speed	24...28	768...896 rpm
										Injection period	2...4	2...4 ms
										Throttle valve angle	6...11	2.5...4.7 <°
										Operational condition	No consequence	---

Copyright by Volkswagen AG. Volkswagen AG does not guarantee or accept any liability with respect to the correctness of information in this document. Copying for private or commercial purposes, in part or in whole, is not permitted unless authorised by Volkswagen AG.

satelettronica

Display group 00 (decimal displayed value)		
Additive learnt value for Lambda probe	0...20	0...0.64 ms
Lambda probe voltage	10...50	0.2...1.0 V
Engine load signal	30...45	11.7...17.5 %
Coolant temperature	120...150	80...110 °C
Battery voltage	115...161	12...16.5 V
Intake air temperature	60...110	20...70 °C

1) Up-to-date specifications:

=> Exhaust emissions test binder

	Display zones			
	1	2	3	4
Display group 01				
Display	xxxx rpm	xxx °C	x.xx V	xxxxxxxx
Specification	780...880 rpm2)	80...110 °C	0.2...1.0 V	00000010
Indicated	Engine speed	Coolant temperature	Lambda probe voltage	Adjustment conditions1)
Display group 02				
Display	xxxx rpm	xx.xx ms	xx.xx V	xxx °C
Specification	780...880 rpm2)	2...4 ms	12...16.5 V	20...70 °C
Indicated	Engine speed	Injection period	Battery voltage	Intake air temperature
Display group 03				
Display	xxxx rpm	xxx %	xx.x <°	xxx %
Specification	780...880 rpm2)	12...17 %	3.0...4.5 <°	13...20 %
Indicated	Engine speed	Engine load signal	Throttle valve angle	Throttle valve positioner duty cycle

1) Relevance of numbers in 8 digit number block => Page 18 .

2) Up-to-date specifications:

=> Exhaust emissions test binder

	Display zones			
	1	2	3	4
Display group 04				
Display	xxxx rpm	xxx %	xxx km/h	xxxxxxxx
Specification	780...880 rpm3)	12...17 %	0 km/h	01000000
Indicated	Engine speed	Engine load signal	Speed signal	Engine operating condition1)
Display group 05				
Display	xxxx rpm	xxx %	x.xx ms	xxxxxxxx
Specification	780...880 rpm	7...9 %	---	00001010

Volkswagen AG. Volkswagen AG does not guarantee or accept any liability with respect to the correctness of information in this document. Copyright by Volkswagen AG.
Reproduction, distribution and publication, in whole or in part, for commercial purposes, is prohibited unless authorised by Volkswagen AG.
satelettronica

	Display zones			
Indicated	Engine speed	Duty cycle valve for activated charcoal filter	Consumption signal	Operating condition Lambda control2)

1) Relevance of numbers in 8 digit number block => Page 18 .

2) Relevance of figures in 8 digit number block => Page 18 .

3) Up-to-date specifications:

=> Exhaust emissions test binder

	Display zones			
	1	2	3	4
Display group 06				
Display	x.xx ms	x.xx	x.xx	x.xx
Specification	0.00...0.60 ms	0.90...1.10	0.90...1.10	0.90...1.10
Indicated	Learned value for Lambda control at idling speed (additive)	Learned value for Lambda control in part/ full load range (multiplicative)	Learned value for throttle valve positioner duty cycle	Learned value for throttle valve positioner duty cycle for automatic gearbox
Display group 07				
Display	xx	xx	x.xx	xxxxxxxx
Specification	57...60 or 1	5...8	0.80...1.20	00000000
Indicated	Coordination Hall sender to engine speed sender	Coordination Hall sender to engine speed sender	Altitude correction value	Operating condition throttle valve control part1)

1) Relevance of figures in 8 digit number block => Page 18 .

Evaluating display group 00

Display zone: 1	Possible fault cause	Fault elimination
More than 110	Intake air temperature sender	- Check intake air temperature sender => Page 57
Less than 60		
Display zone: 2	Possible fault cause	Fault elimination
Less than 115	Alternator defective Battery discharged/defective	- Check control unit voltage supply => Page 63 Check alternator Check battery
More than 161	Voltage regulator defective	- Check voltage regulator
Display zone: 3	Possible fault cause	Fault elimination
More than 150	Coolant temperature sender	- Check coolant temperature sender => Page 55
Less than 120	Coolant temperature sender Thermostat defective (open)	- Check thermostat => Repair group 19

Display zone: 4	Possible fault cause	Fault elimination
More than 45	Consumer switched on	- Switch off consumer
Less than 30	Unmetered air	- Check intake air system for leaks => Page 72
Display zone: 5	Possible fault cause	Fault elimination
Constant 79	Lambda control blocked Shortage of fuel	- Check Lambda probe and Lambda control => Page 38 Check fuel in tank

Display zone: 6	Possible fault cause	Fault elimination
Adaption figure more than 201)	Oil dilution	- Change oil or carry out a fast drive on country roads

satelettronica

Protected by copyright. Copying for private or commercial purposes, in part or in whole, is not permitted unless authorised by Volkswagen AG. Volkswagen AG does not guarantee or accept any liability with respect to the correctness of information in this document. Copyright by Volkswagen AG.

	Unmetered air in air intake system or exhaust manifold/front pipe	- Check intake air system for leaks (unmetered air) => Page 72 Check exhaust system => Repair group 26
	Fuel pressure too high	- Check fuel pressure regulator => Page 70
	Fuel pressure too low	
	Injector leaking	- Check injectors => Page 67
	Injector not opening or only opening partially	
	Lambda probe heating	- Check Lambda probe heating => Page 42

1) It is not possible to establish from adaption value, whether the idling mixture is being adapted in rich or lean direction.

Display zone: 8	Possible fault cause	Fault elimination
Less than 6	Unmetered air in air intake system or exhaust manifold/front pipe	- Check intake air system for leaks (unmetered air) => Page 72 Check exhaust system => Repair group 26
More than 11	Basic setting of throttle valve control part has not been completed Throttle valve control part defective Throttle cable adjustment	- Perform basic setting => Page 48 Adjust throttle cable => Repair group 20
Display zone: 9	Possible fault cause	Fault elimination
More than 4	Consumer switched on Lambda control on limit	- Switch off consumer Check Lambda probe and Lambda control => Page 38
Less than 2	Fuel pressure regulator defective/hose fallen off	- Check fuel pressure regulator => Page 70
Display zone: 10	Possible fault cause	Fault elimination
Less than 24	Throttle valve control part defective	- Check throttle valve control part => Page 48
More than 28	Throttle valve control part defective Unmetered air	- Check throttle valve control part => Page 72

Relevance of figures in 8 digit number block for adjustment conditions and operating condition.

Significance when displayed digit = 1									
x	x	x	x	x	x	x	x	Adjustment conditions (display group 01)	Engine operating condition (display group 04)
1								Not relevant	Overrun
	1							Signal from automatic gearbox	Idling
		1						Air conditioner compressor switched on	Part load
			1					Idling switch open	Full load
				1				Fault in the Lambda control	Not relevant
					1			Throttle valve opened	Not relevant
						1		Engine running	Not relevant
							1	Coolant temperature below 80 °C	Not relevant

Relevance of figures in 8 digit number block for Lambda control and throttle valve control part.

Relevance when displayed digit = 1									
x	x	x	x	x	x	x	x	Lambda control operating condition (display group 05)	Throttle valve control part operating condition (display group 07)
1								Coding for Syncro	Mechanical emergency running
	1							Not relevant	Not relevant
		1						Not relevant	Adaption necessary

Protected by copyright. Copying or publication in any form without the express permission of Volkswagen AG is prohibited unless authorised by Volkswagen AG. Volkswagen AG does not guarantee or accept any liability with respect to the correctness of information in this document.
satelettronica

Relevance when displayed digit = 1									
			1					Lambda control at limit	Adaption necessary
				1				Lambda control active	Not relevant
					1			Fault in fault memory	Adaption terminated (battery voltage too low)
						1		Lambda probe operationally ready	Adaption terminated (time exceeded)
							1	Rich mixture (0 = lean mixture)	Idling switch open

- Additional measures see Repair procedures:

Notes:

- Press ⇒ button to end read measured value block.
- After terminating read measured value block input 06 for "End output" function and confirm with Q.

Protected by copyright. Copying for private or commercial purposes, in part or in whole, is not permitted unless authorised by Volkswagen AG. Volkswagen AG does not guarantee or accept any liability with respect to the correctness of information in this document. Copyright by Volkswagen AG.

satelettronica

24 - Mixture preparation, Injection

1 - Simos injection and ignition system

1.1 - Simos injection and ignition system

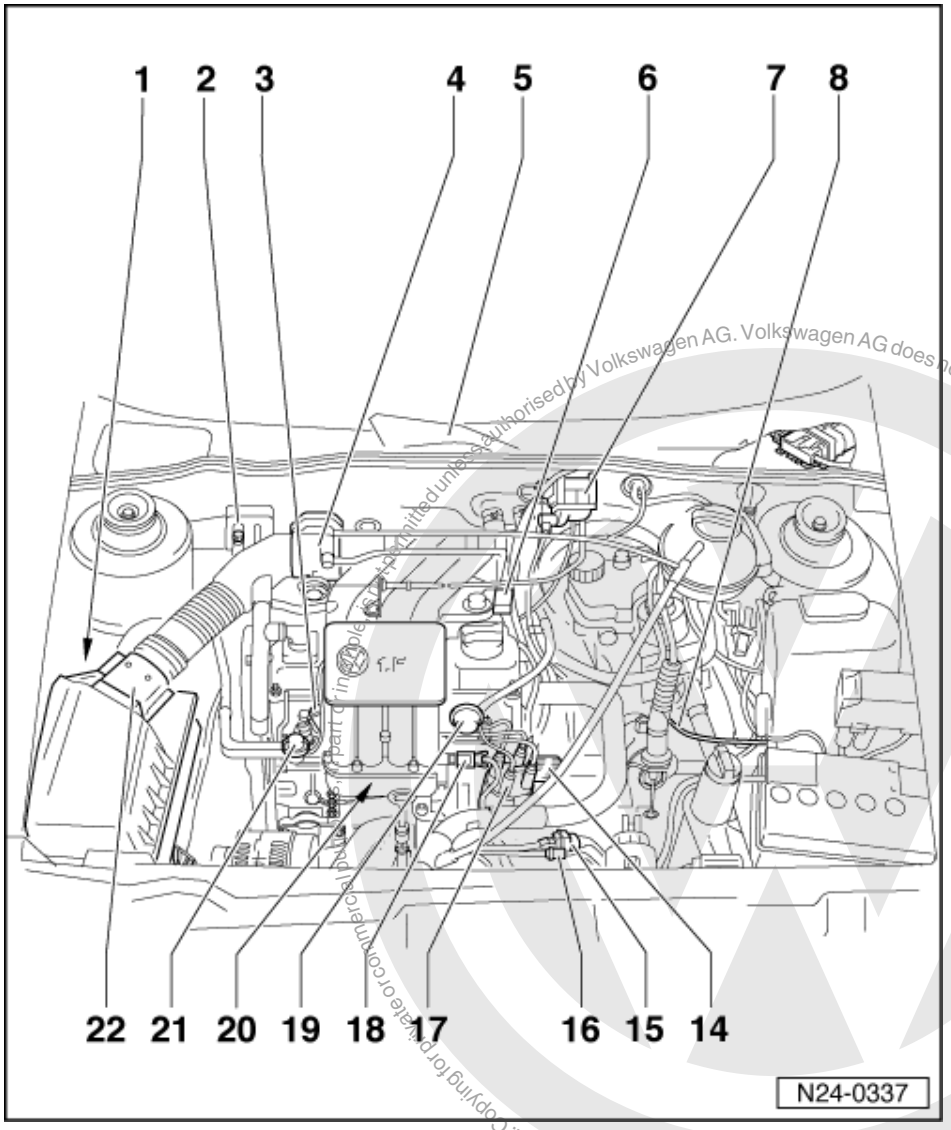

Protected by copyright. Copying for private or commercial purposes, in part or in whole, is not permitted unless authorised by Volkswagen AG. Volkswagen AG does not guarantee or accept any liability with respect to the correctness of information in this document. Copyright by Volkswagen AG.

satelettronica

1.2 - Fitting locations overview

1 Activated charcoal filter solenoid valve 1 (N80)
- Below air cleaner
- Activated charcoal filter system

=> Repair group 20; removing and installing parts of the fuel supply system; servicing activated charcoal filter system removing and installing parts of the fuel supply system servicing activated charcoal filter system

2 4 pin connector
- For Lambda probe and Lambda probe heating

3 Injector (N30...N33)

4 Throttle valve control part (J338)

5 Intake manifold change-over valve (N156)

6 Ignition transformer (N152)
- With output stage (N157)
- => Page 74 , item 4

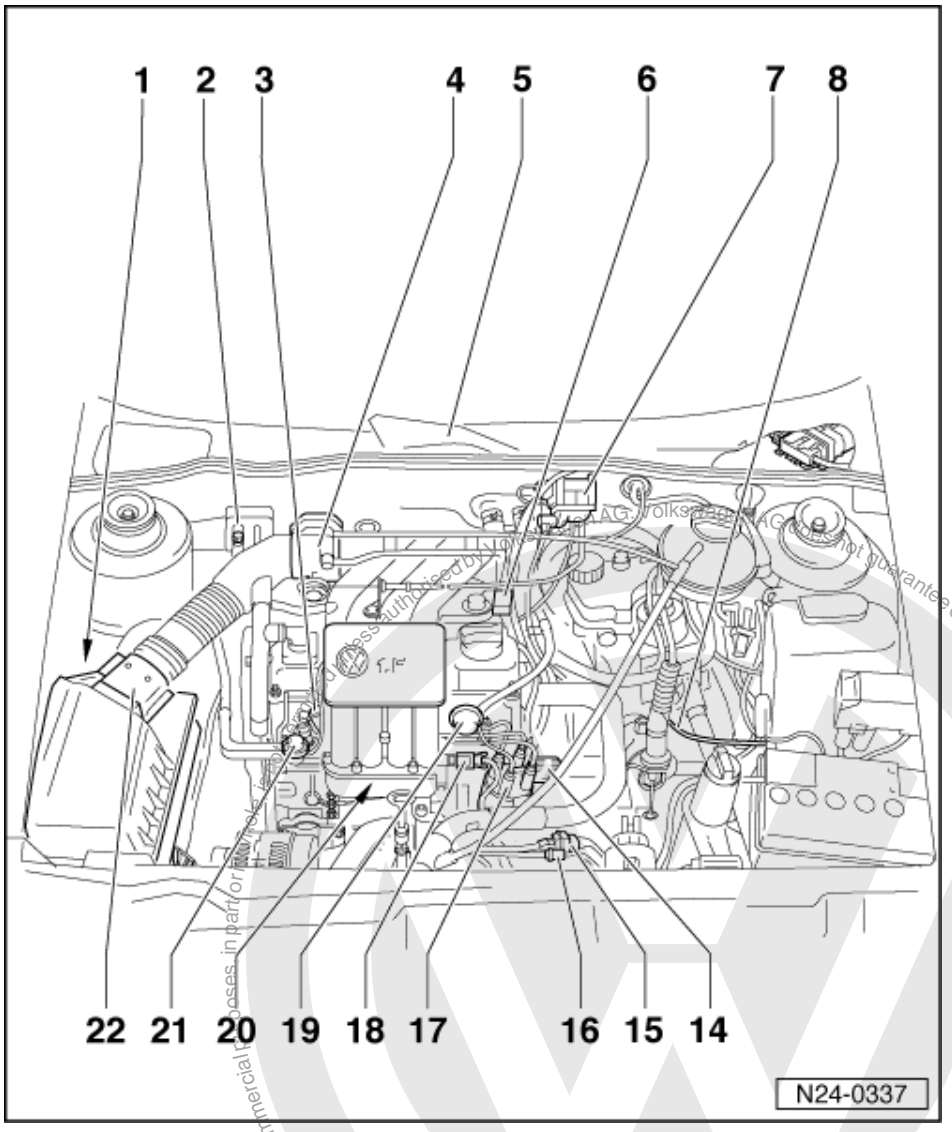

7 Speedometer sender (G22)

8 Simos injection and ignition system control unit (J361)

9 Coolant temperature sender (G62)
- Black, with temperature gauge sender (G2)

10 Central connector

11 3 pin connector
- For knock sensor
- Blue

12 3 pin connector
- For engine speed sender
- Black

13 Engine speed sender (G28)

14 Distributor with Hall sender (G40)

satelettronica

- => Page 76 , item 15

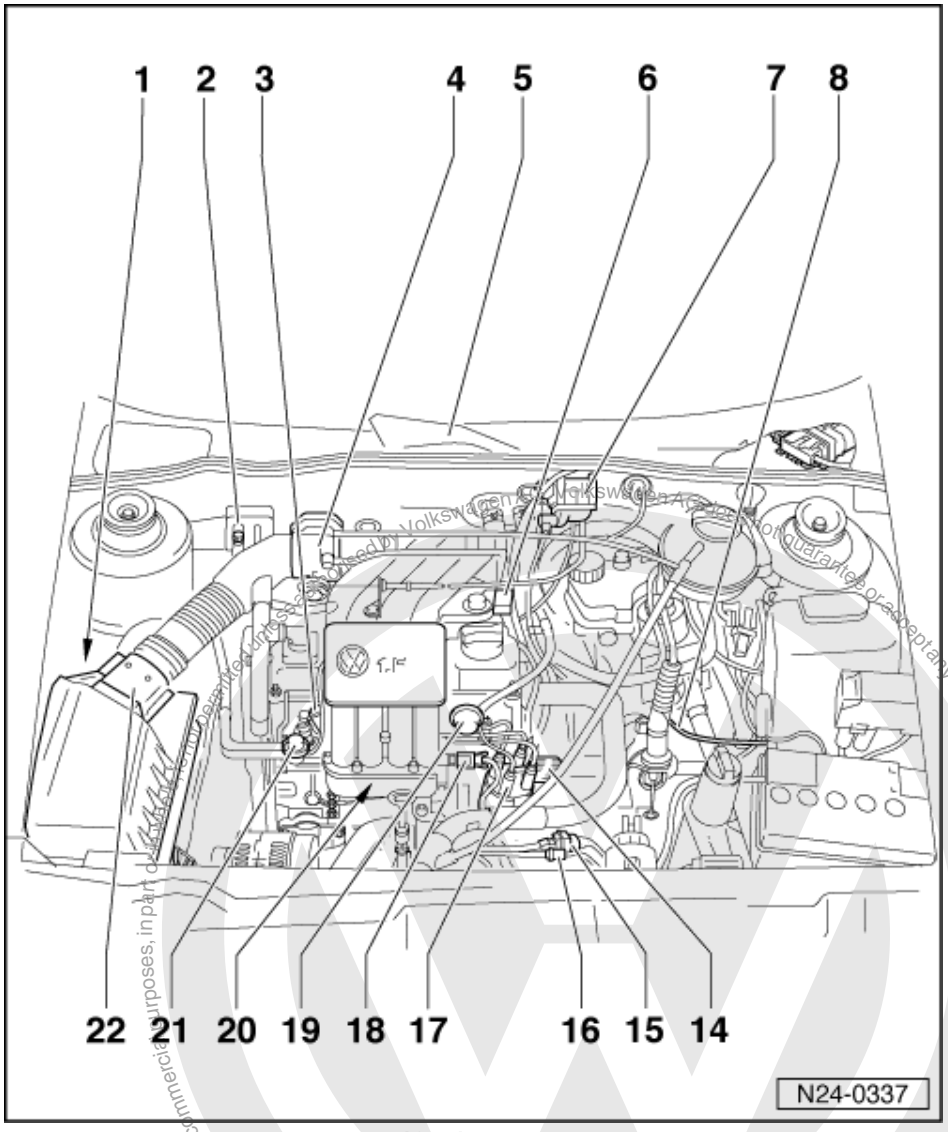

15 Intake air temperature sender (G42)

16 Intake manifold change-over vacuum unit

17 Knock sensor 1 (G61)

- => Page 74 , item 7

18 Earth connection

19 Fuel pressure regulator

20 Air mass meter (G70)

21 Activated charcoal filter

- Below air cleaner
- Activated charcoal filter system

=> Repair group 20; removing and installing parts of the fuel supply system; servicing activated charcoal filter system removing and installing parts of the fuel supply system servicing activated charcoal filter system

Protected by copyright. Copyright by Volkswagen AG.
Volkswagen AG, Volkswagenwerk Aktiengesellschaft does not guarantee or accept any liability with respect to the correctness of information in this document.
satelettronica

1.3 - Servicing injection part

Servicing ignition part

=> Repair group 28

Notes:

- Fuel hoses in engine compartment must only be secured with spring type clips. The use of clamp or screw type clips is not permissible.
- The control unit for the fuel injection and ignition system is equipped with a fault memory. Before carrying out repairs, adjustment work and fault finding the fault memory must be interrogated and the vacuum connections checked (outside air).
- Components marked with * are checked via the self diagnosis.
  => Page 4 , interrogating fault memory
- Components marked with ** are checked via the final control control diagnosis => Page 12 .
- For trouble-free operation of the electrical components, a voltage of at least 11.5 V is necessary.
- Do not use sealants containing silicone. Particles of silicone drawn into the engine, will not be burnt in the engine and damage the Lambda probe.

- If the engine starts, runs for a short period and then stops, after fault finding, repairs or component tests, then the fault may lie with the immobilizer which is blocking the engine control unit. The fault memory must be interrogated and if necessary the control unit matched => Page 65 .
- During some checks it can happen that the control unit will recognise and store a fault. Therefore after completing all checks and repairs the fault memory must be interrogated and if necessary erased.
  => Page 4 , interrogating fault memory

Safety precautions =>Page 35

Rules for cleanliness => Page 35

Technical data => Page 36

Checking engine operation => Page 44

Protected by copyright. Copying or distribution of this document or in whole, is not permitted unless authorised by Volkswagen AG. Volkswagen AG does not guarantee or accept any liability with respect to the correctness of information in this document.
satelettronica

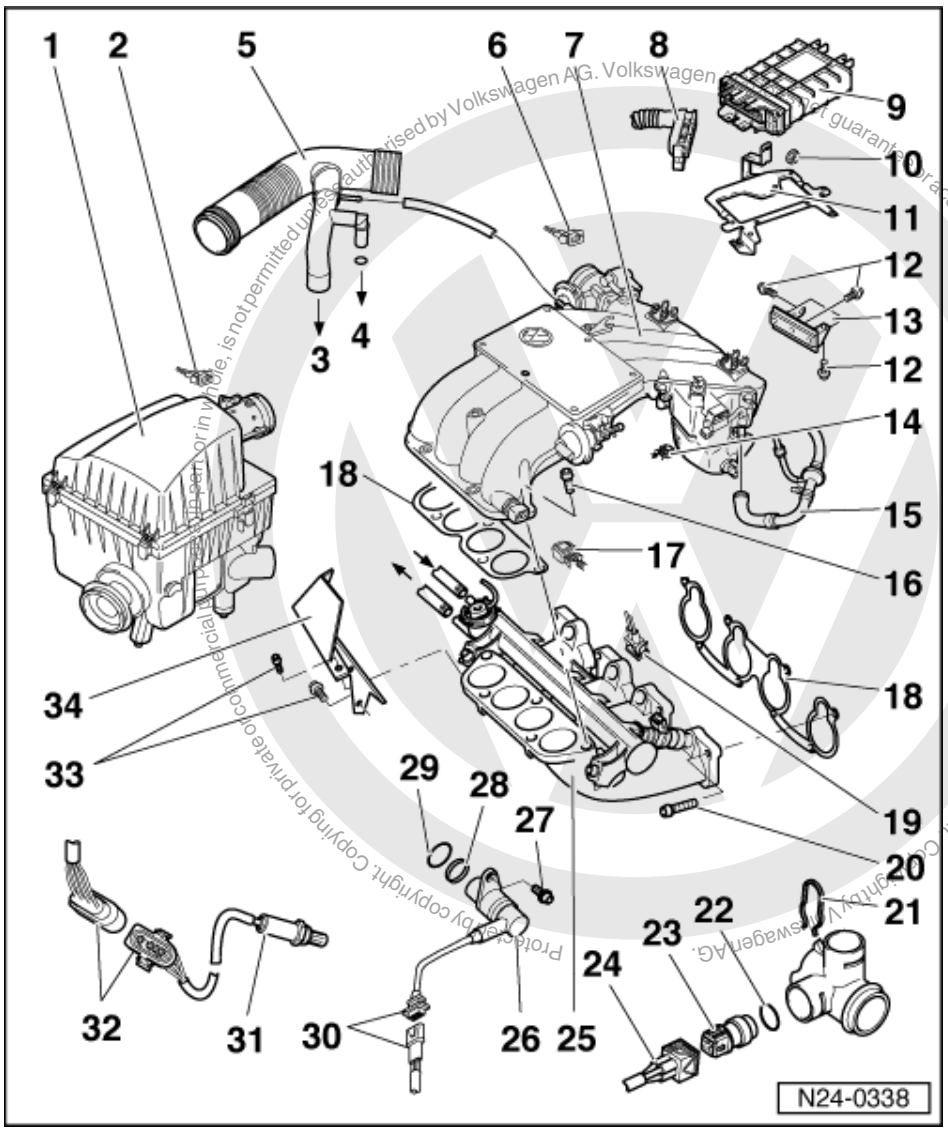

1 Air cleaner
- Dismantling and assembling => Page 34

2 Connector
- 3 pin
- For air mass meter (G70)

3 To crankcase

4 To cylinder head cover

5 Intake hose

6 Connector
- 8 pin
- For throttle valve control part (J338)

7 Intake manifold
- Dismantling and assembling upper part => Page 30
- Dismantling and assembling lower part => Page 33

8 Connector
- Only disconnect or connect with ignition switched off
- Unlatch to disconnect

satelettronica

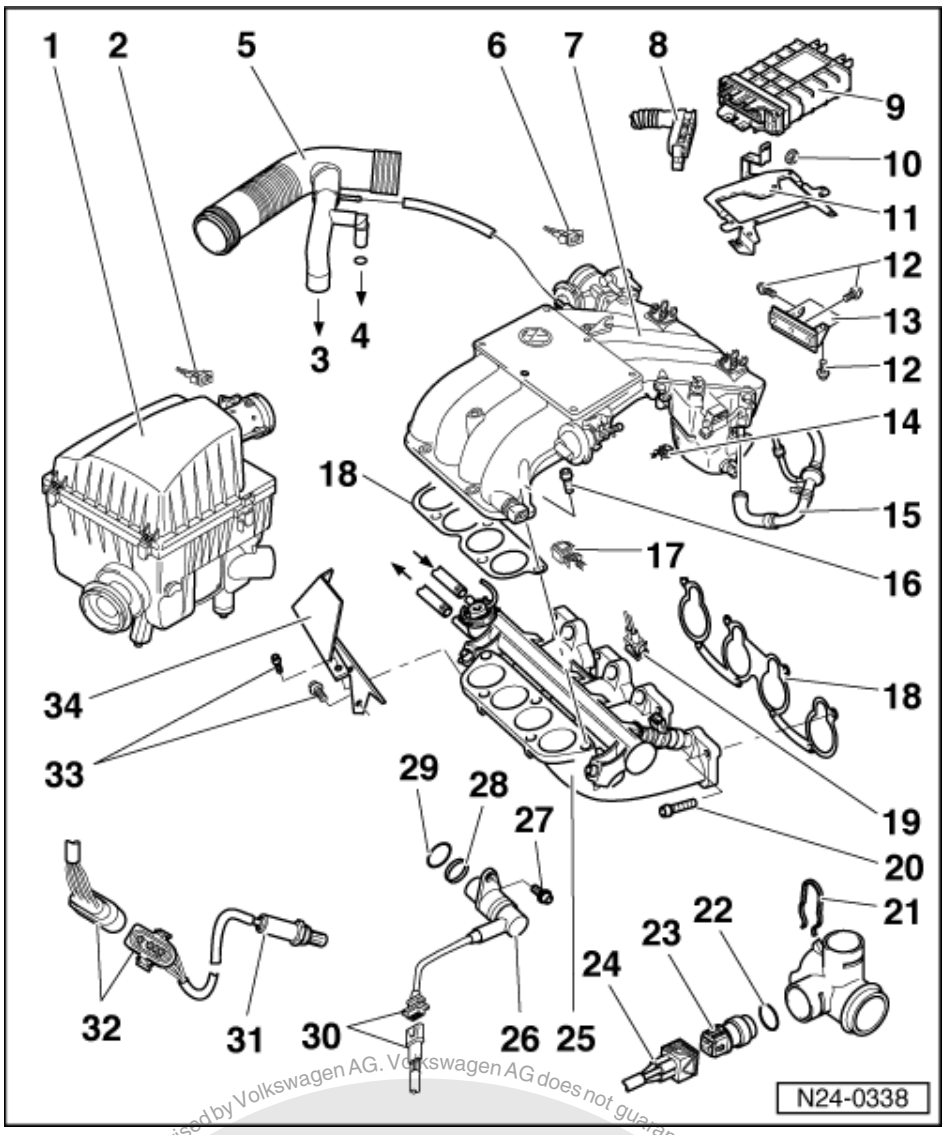

9 Simos control unit (J361)*

- Location: in plenum chamber, left
- For injection system, throttle valve control part, Lambda regulation, knock control, activated charcoal filter solenoid valve 1, speed governing via injectors or fuel pump relay, ignition and self diagnosis
- Voltage supply via voltage supply relay (J363) and terminal 15
- Checking voltage supply => Page 63
- Checking signal from starter
  => Page 67
  If the control unit is replaced then the following work must be carried out:
- Check control unit coding => Page 3 , Coding Simos control unit
- Perform basic setting => Page 37
- Match control unit to electronic immobilizer => Page 65

Protected by copyright. Copying for private or commercial purposes, in part or in whole, is not permitted unless authorised by Volkswagen AG. Volkswagen AG does not guarantee or accept any liability with respect to the correctness of information in this document. Copyright by Volkswagen AG.
satelettronica

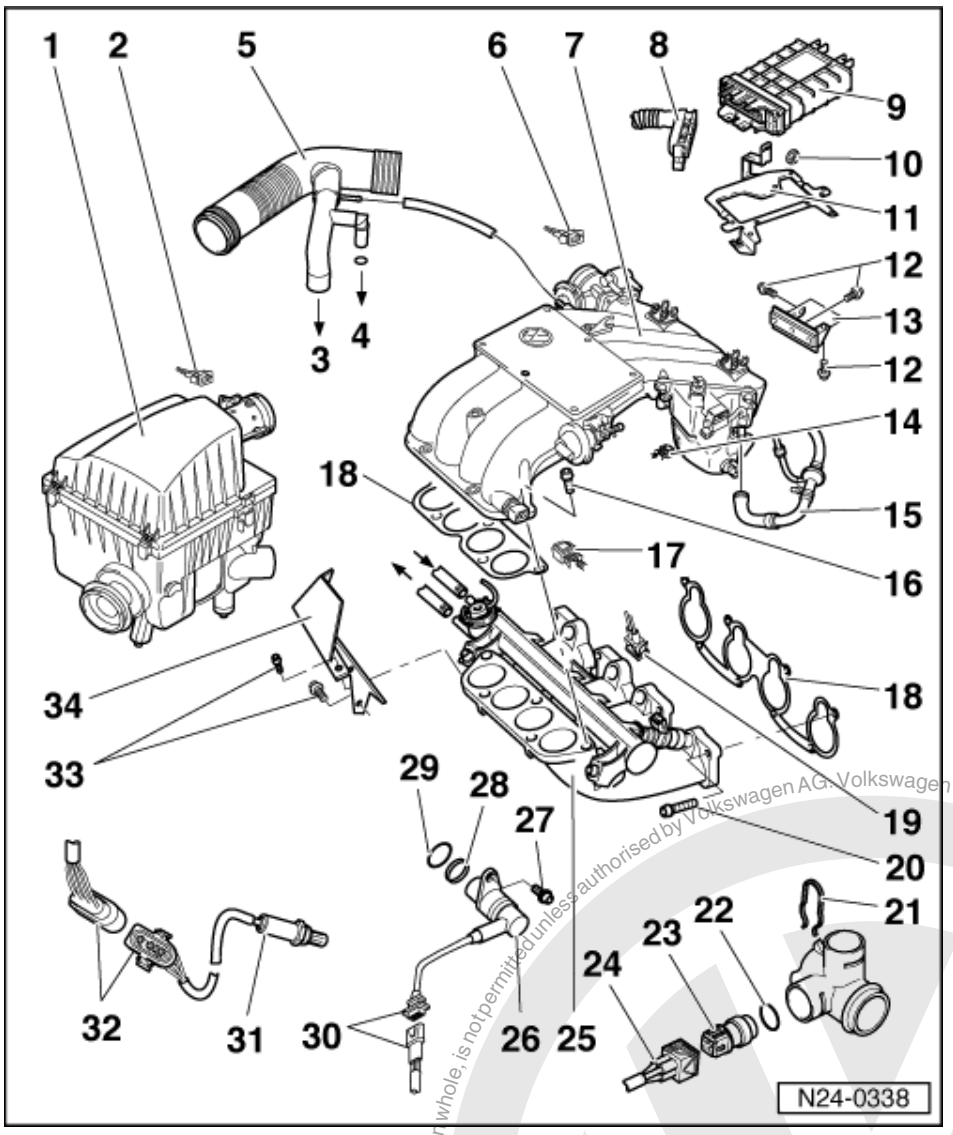

10 10 Nm
11 Securing plate
- For Simos control unit (J361)

12 20 Nm
13 Support
- Between intake manifold and cylinder head cover

14 Connector
- 2 pin
- For intake manifold change-over valve (N156)

15 To brake servo
16 20 Nm
17 Connector
- 2 pin
- For intake air temperature sender (G42)

18 Seal
- Renew

satelettronica
Volkswagen AG does not guarantee or accept any liability with respect to the correctness of information in this document. Copyright by Volkswagen AG.
Protected by copyright. Copying for private or commercial purposes, in part or in whole, is not permitted unless authorised by Volkswagen AG.

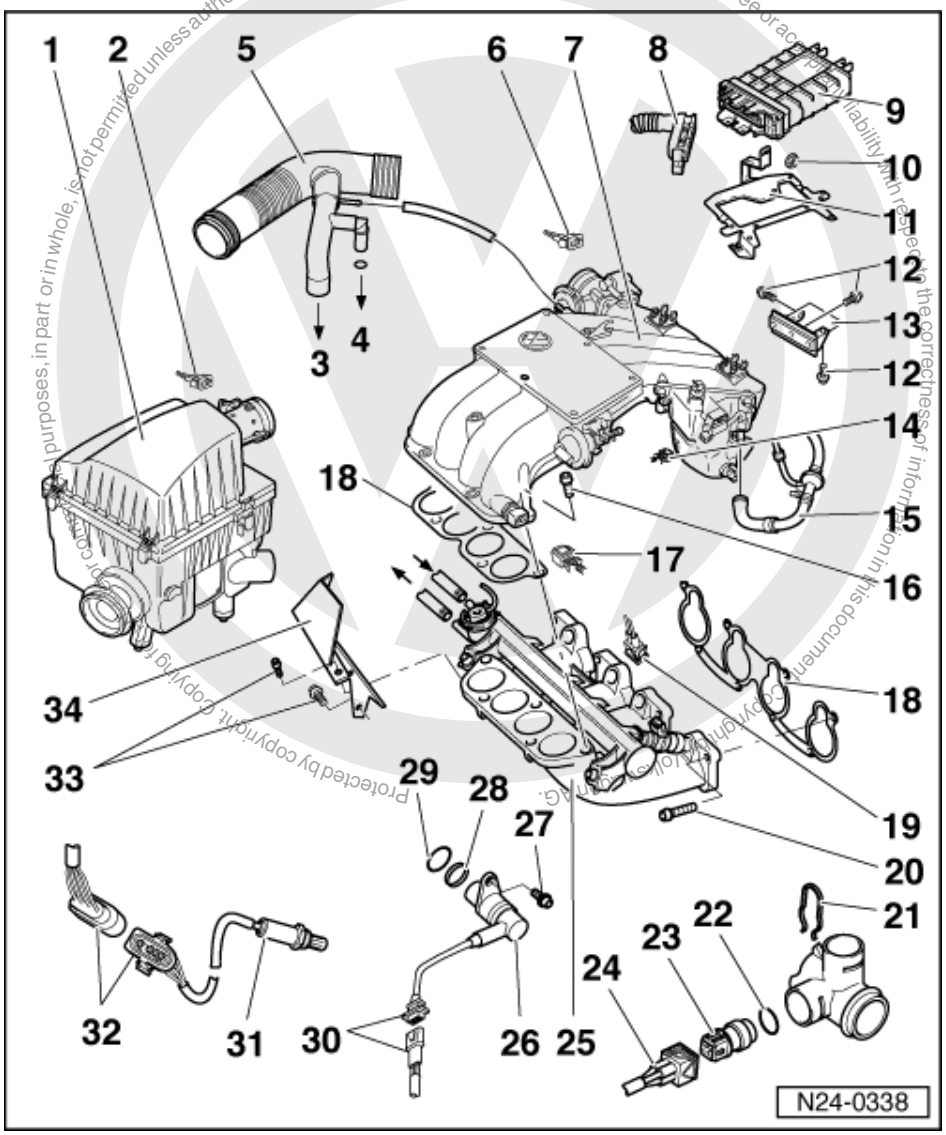

19 Connector
- 2 pin
- For injector

20 25 Nm

21 Retaining clip
- Check seated securely

22 O ring
- Renew if damaged

23 Coolant temperature sender (G62)*
- Black, with temperature gauge sender (G2)
- For Simos control unit
- Checking => Page 55
- If necessary before removing, release pressure from cooling system

24 Connector
- 4 pin
- Wiring chamber 1 and wiring chamber 3 for G62

25 Intake rail - lower part

satelettronica

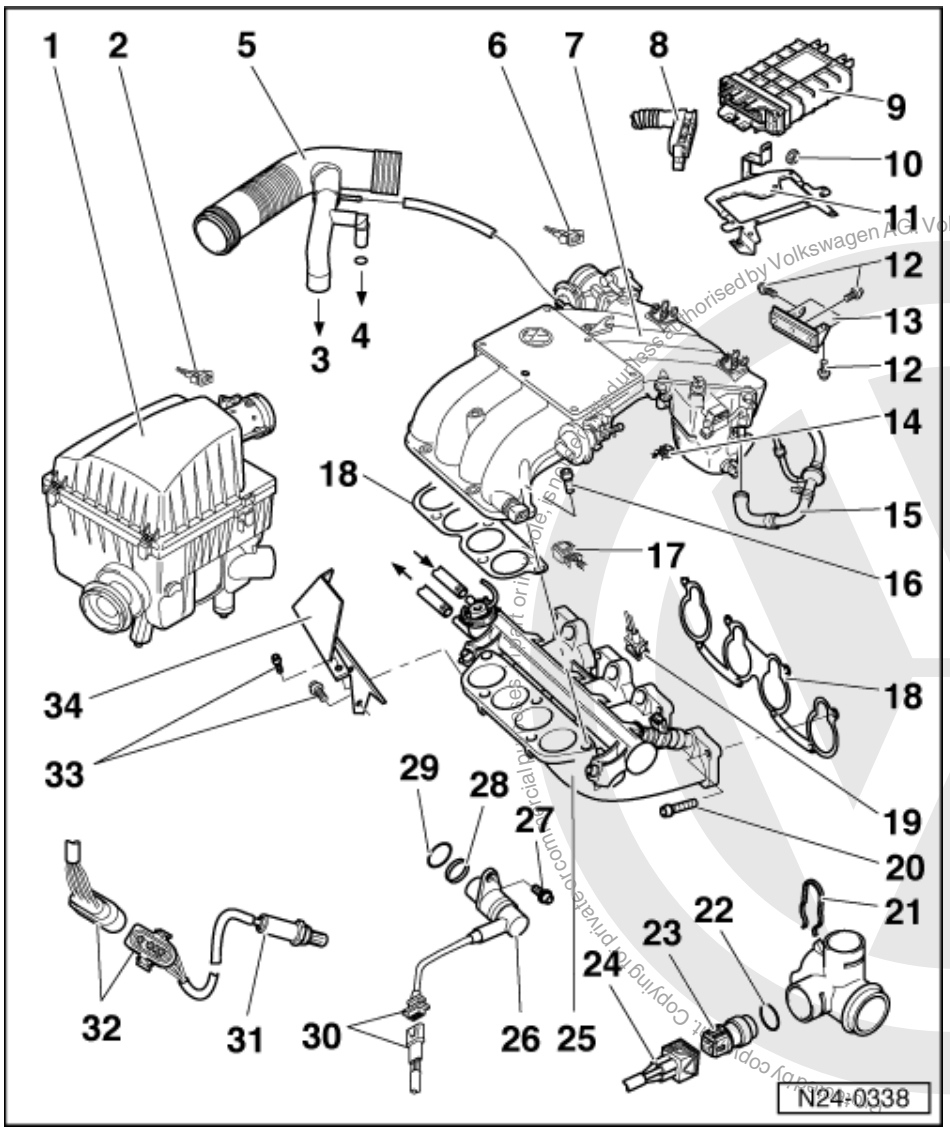

26 Engine speed sender (G28)*

- Checking => Page 60

27 10 Nm

28 Spacer ring

29 O ring

- Renew if damaged

30 3 pin connector

- For engine speed sender
- Black

satelettronica
Volkswagen AG does not guarantee or accept any liability with respect to the correctness of information in this document. Copyright by Volkswagen AG.

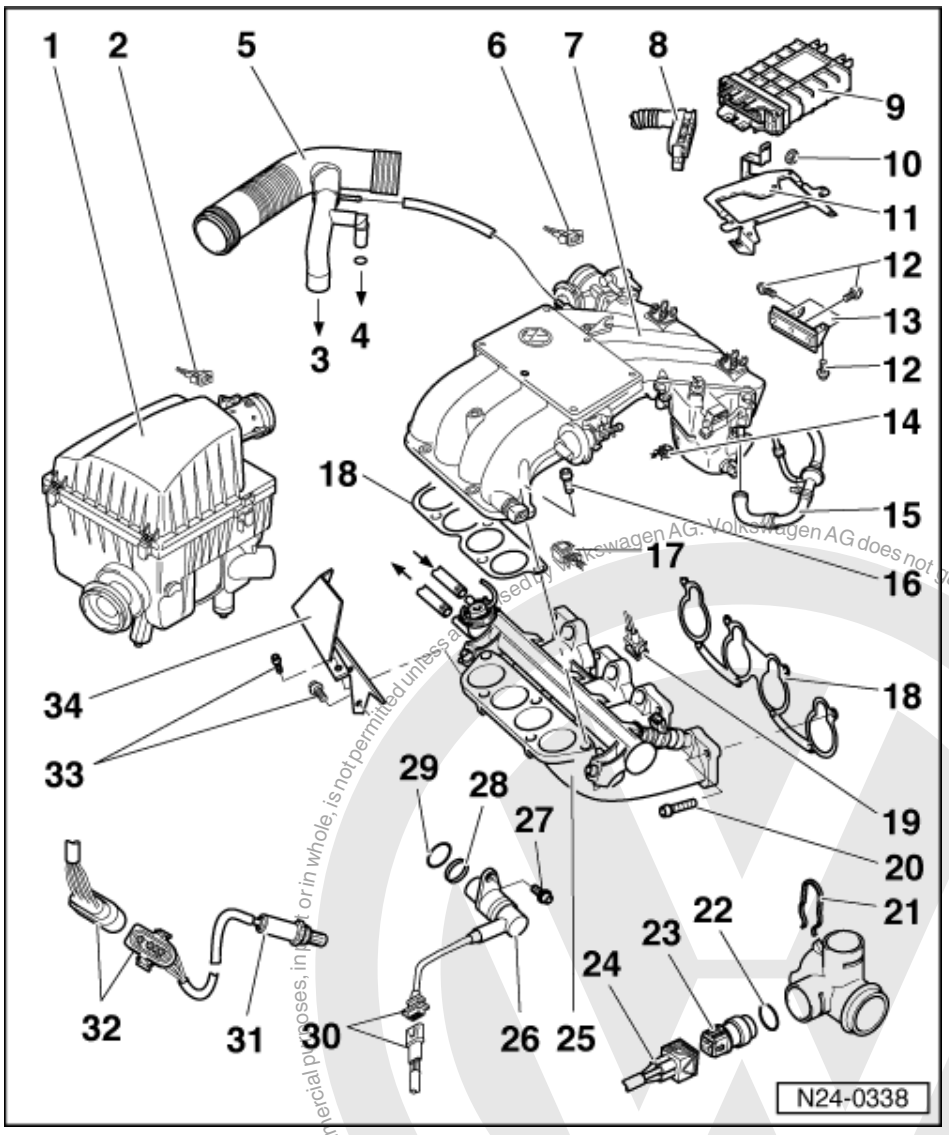

31 Lambda probe (G39)*, 50 Nm

- Fitting location: front pipe
- Grease only the threads with "G5"; "G5" must not get into the slots on the probe body
- Checking Lambda probe and Lambda control
  => Page 38
- Probe heating voltage supply via fuel pump relay (J17)
- Checking Lambda probe heating => Page 42

32 4 pin connector

- For Lambda probe and Lambda probe heating
- Secured to rear engine mounting on right, in direction of travel

33 M6 = 10 Nm
M8 = 20 Nm

34 Deflector

Copyright by Volkswagen AG. Volkswagen AG does not guarantee or accept any liability with respect to the correctness of information in this document. Copyright by Volkswagen AG. Reproduction for commercial purposes, in part or in whole, is not permitted unless authorised by Volkswagen AG.
satelettronica

1.4 - Dismantling and assembling intake manifold - upper part

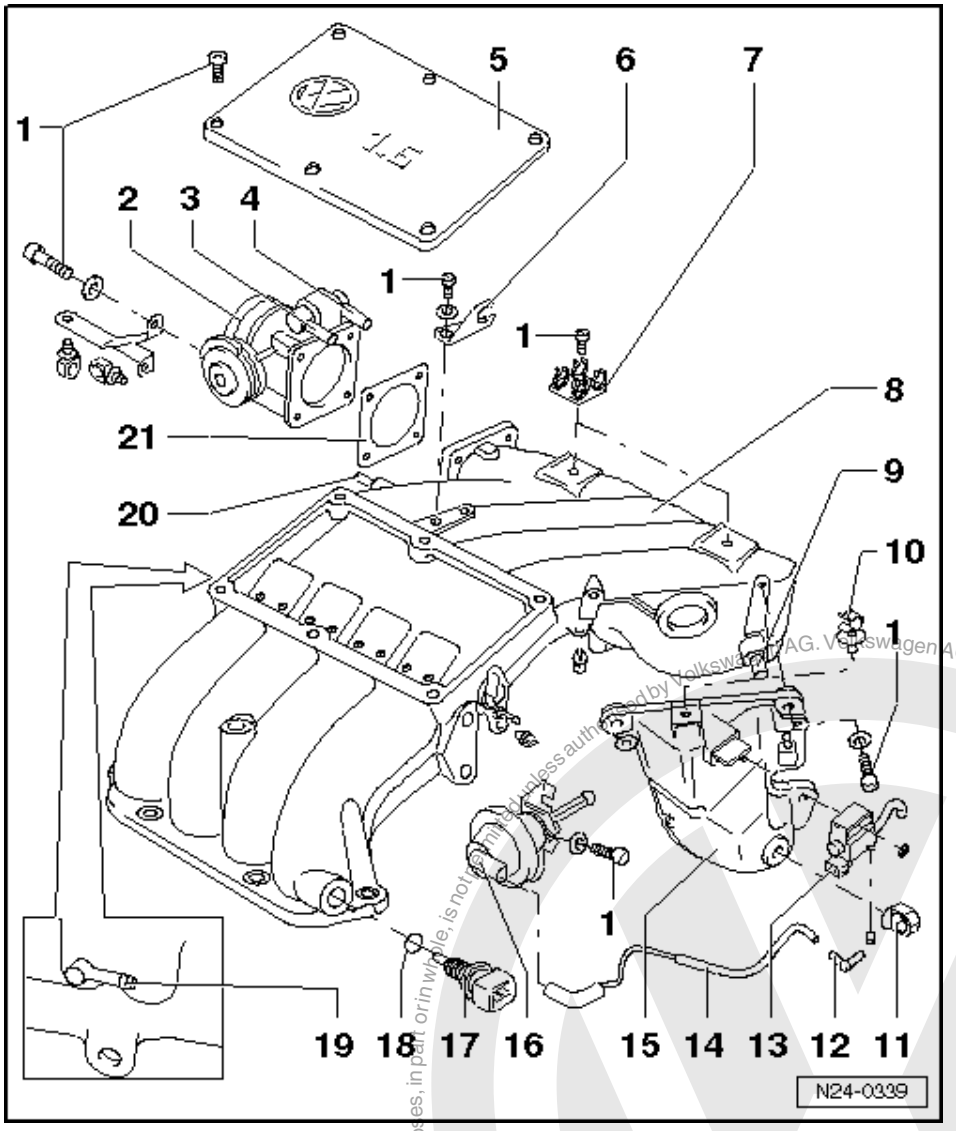

1 M6 = 10 Nm
M8 = 20 Nm

2 Throttle valve control part (J338)*
- Checking => Page 48
- Components of the throttle valve control part (J338):
  Throttle valve positioner (V60), throttle valve potentiometer (G88), throttle valve potentiometer (G69) and idling switch (F60)
- If replaced carry out basic setting => Page 37

3 To connection
- On cylinder head

4 To expansion tank

5 Cover

Protected by copyright. Copying for private or commercial purposes, in part or in whole, is not permitted unless authorised by Volkswagen AG. Volkswagen AG does not guarantee or accept any liability with respect to the correctness of information in this document. Copyright by Volkswagen AG.
satelettronica

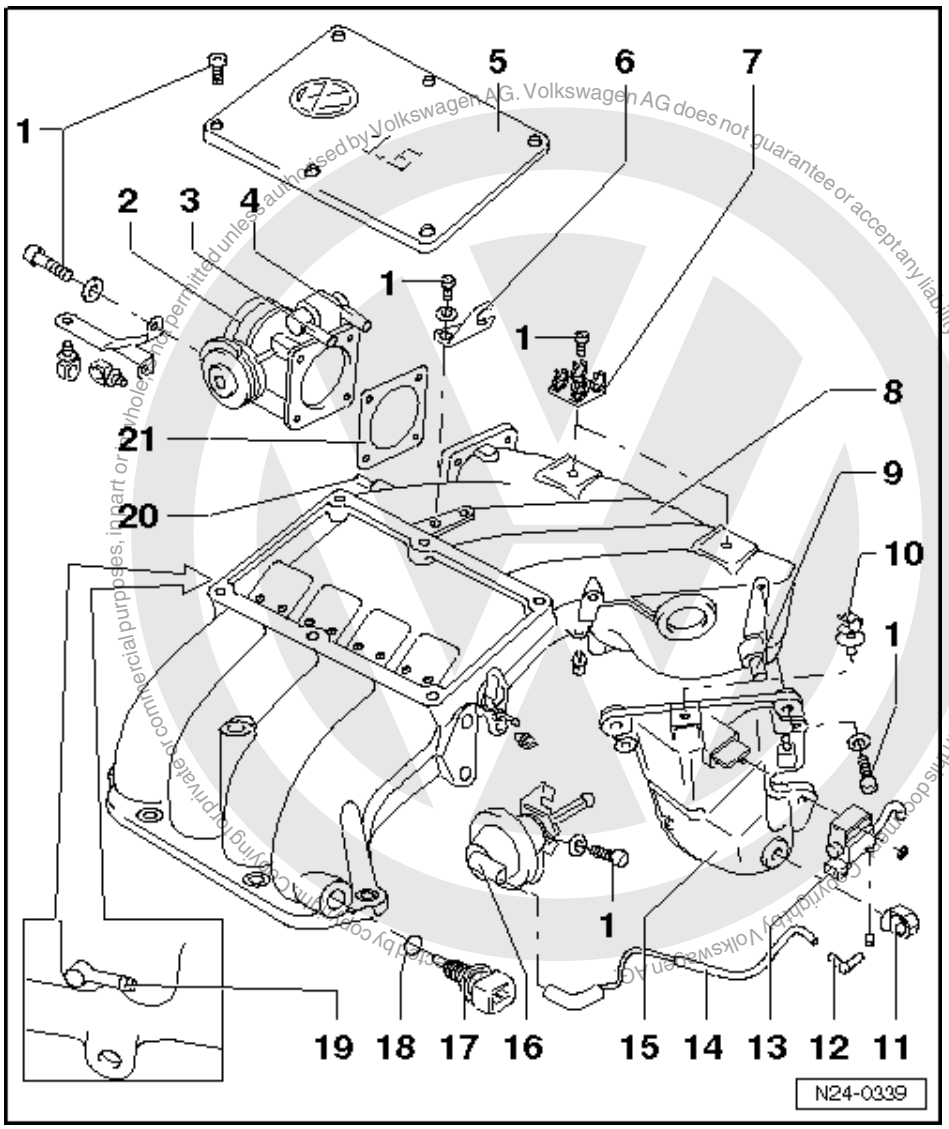

6 Support bracket
- For accelerator cable
- Adjusting accelerator cable

=> Repair group 20, removing and installing parts of the fuel supply system, adjusting accelerator cable

7 Retaining clip
- For coolant hose

8 Intake manifold - upper part

9 To brake servo

10 Retaining clip
- For accelerator cable

11 Retaining clip
- For coolant hose

12 Angled piece

13 Intake manifold change-over valve (N156)*/**
- Checking => Page 45

14 Vacuum hose/pipe

satelettronica

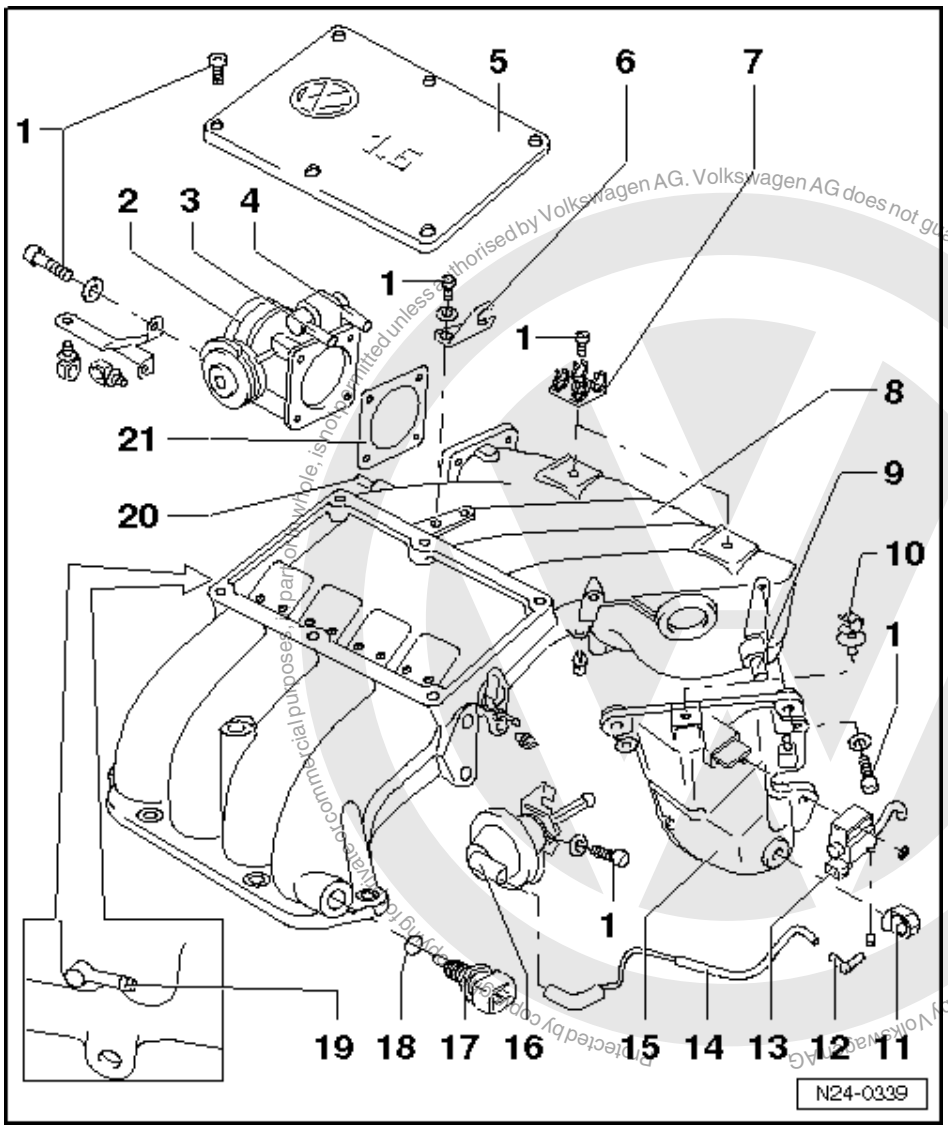

15 Vacuum reservoir
- For intake manifold change-over at full load

16 Vacuum unit
- For intake manifold change-over

17 Intake air temperature sender (G42)*
- Checking => Page 57

18 O ring
- Renew if damaged

19 Vacuum connection
- For fuel pressure regulator

20 To intake hose

21 Seal
- Renew

satelettronica

1.5 - Dismantling and assembling intake manifold - lower part

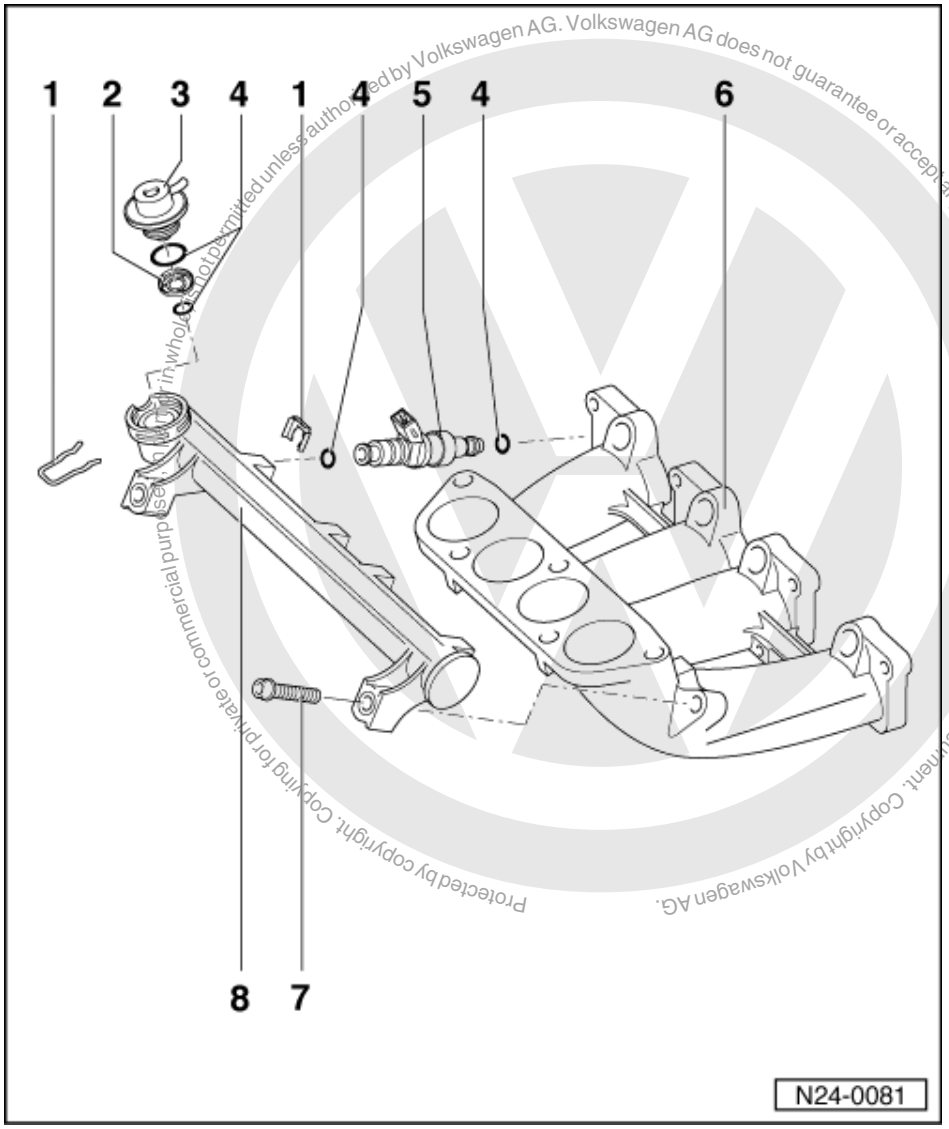

Protected by copyright. Copying for private or commercial purposes, in whole or in part, is not permitted unless authorised by Volkswagen AG. Volkswagen AG does not guarantee or accept any liability with respect to the correctness of information in this document. Copyright by Volkswagen AG.

1 Retaining clip
- Check securely seated

2 Strainer

3 Fuel pressure regulator
- Checking => Page 70

4 O ring
- Renew if damaged

5 Injectors (N30...N33)*
- Checking => Page 67

6 Intake rail - lower part

7 10 Nm

8 Fuel rail

satelettronica

1.6 - Dismantling and assembling air cleaner

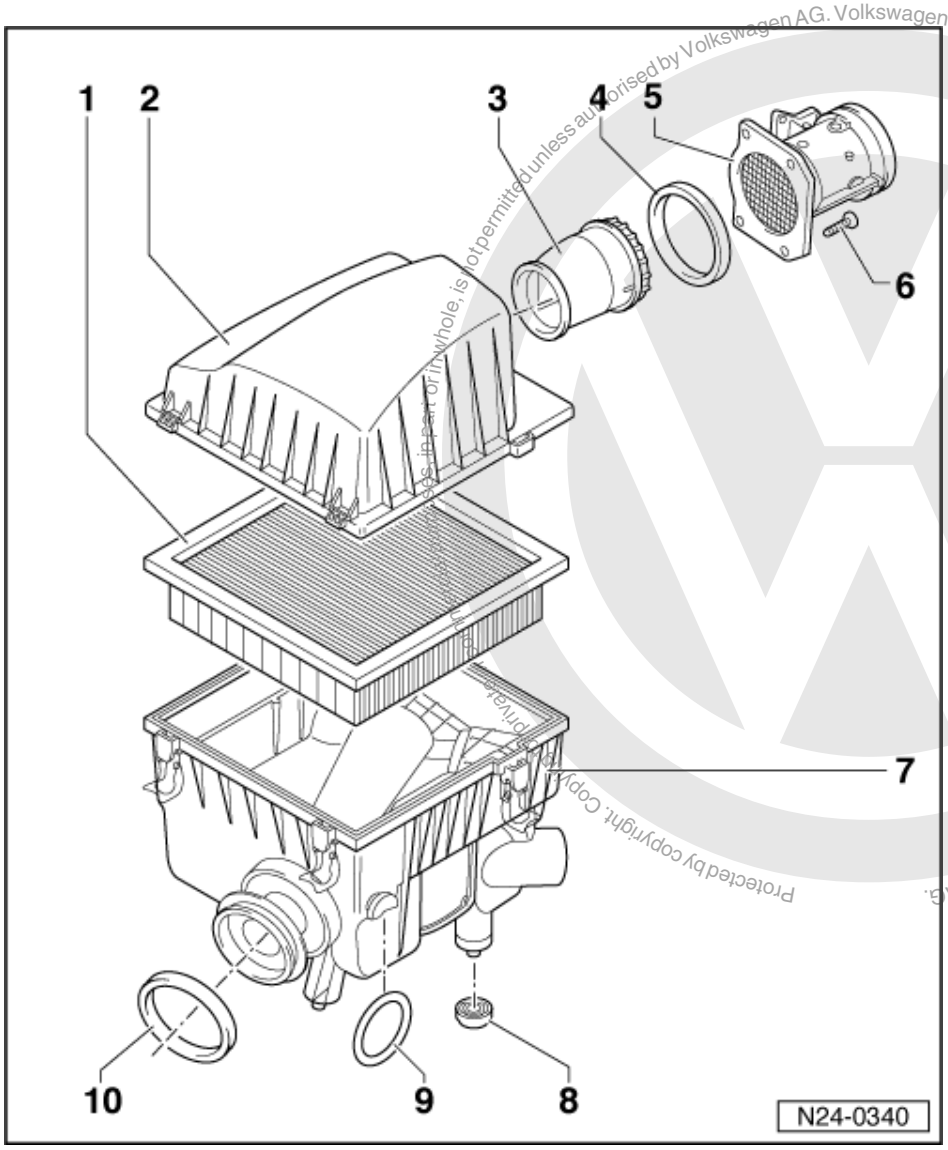

Protected by copyright. Copyright by Volkswagen AG.
Volkswagen AG does not guarantee or accept any liability with respect to the correctness of information in this document. Copyright by Volkswagen AG.
Distribution to third parties, in part or in whole, is not permitted unless authorised by Volkswagen AG.
satelettronica

1 Filter element
2 Air cleaner upper part
3 Air duct
4 Seal
- Renew if damaged

5 Air mass meter (G70)*
- Checking => Page 46

6 10 Nm
7 Air cleaner lower part
8 Packing
9 Retaining ring
10 Foam seal

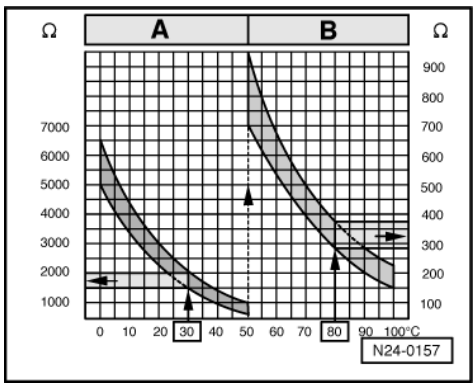

-> Fig. 1 Resistance graph

The diagram is valid for coolant temperature sender (G62) and intake air sender (G42).

Scale A shows resistance values for temperature range 0...50 °C and scale B the values for temperature range 50...100 °C.

Examples:

- 30 °C corresponds to a resistance from 1500...2000 ω
- 80 °C corresponds to a resistance from 275...375 ω

1.7 - Safety precautions

Warning!
The fuel system is pressurized! Before loosening hose connections or opening the test connection, place a cloth around the connection. Then carefully pull hose off or remove the plug.

To prevent injuries to persons and/or damage to the fuel injection and ignition system, the following must be noted:

- Do not touch or disconnect ignition wiring when the engine is running or being turned at starter speed.
- The ignition must be switched off before connecting or disconnecting injection or ignition system wiring or tester cables.
- If the engine is to be turned at starter speed, without starting, e.g. when checking compressions, pull 3 pin connector off ignition transformer.

1.8 - Rules for cleanliness

When working on the fuel supply/injection system, pay careful attention to the following "5 rules":

- Thoroughly clean all unions and the adjacent areas before disconnecting.
- Place parts that have been removed on a clean surface and cover. Do not use fluffy cloths!
- Carefully cover opened components or seal, if the repair cannot be carried out immediately.
- Only install clean components:
  Only unpack replacement parts immediately prior to installation.
  Do not use parts that have been stored loose (e.g. in tool boxes etc.).
- When the system is open:
  Do not work with compressed air if this can be avoided.
  Do not move vehicle unless absolutely necessary.

Copyright by Volkswagen AG. Volkswagen AG does not guarantee or accept any liability with respect to the correctness of information in this document. Copyright by Volkswagen AG. Copying for private or commercial purposes, in part or in whole, is not permitted unless authorised by Volkswagen AG.
satelettronica

1.9 - Technical data

Engine code	AFT
Idling check2) Idling speed2)	 790...8901)
Simos control unit3) Part number	 => Parts catalogue
Max. engine speed rpm	6300...6500

1) Up-to-date specifications:

=> Exhaust emissions test binder

2) Not adjustable

3) If replaced carry out basic setting => Page 37

1.10 - Idling check

Notes:

- Idling speed, ignition timing and CO content not adjustable.
- The idling speed is regulated to specification by the throttle valve positioner in conjunction with the DIS function.
- The position of the distributor has no influence on ignition timing.

- CO content regulated by Lambda regulation. Faults in Lambda control are detected in self-diagnosis and stored in fault memory.

Special tools, testers and auxiliary items

- Fault reader V.A.G 1551 or vehicle system tester V.A.G 1552 with cable V.A.G 1551/3

Check conditions

- Engine oil temperature at least 80 °C
- Electrical consumers switched off (radiator fan must not run during the check)
- Air conditioner switched off
- Accelerator cable adjustment OK

=> Repair group 20, removing and installing parts of the fuel supply system, adjusting accelerator cable

Test sequence

- Start engine and run at idling speed.
- Interrogate fault memory, if necessary, repair fault and erase fault memory.
  => Page 4 , interrogating and erasing fault memory
- Then:
  - Leave fault reader V.A.G 1551 connected.
  - Continue running engine at idling speed.

-> Indicated on display:

```
Rapid data transfer      HELP
Select function XX
```

- Press keys 0 and 8 for the function "Read measured value block" and confirm entry with Q key.

-> Indicated on display:

satelettronica
Protected by copyright. Copying for private or commercial purposes, in part or in whole, is not permitted unless authorised by Volkswagen AG. Volkswagen AG does not guarantee or accept any liability with respect to the correctness of information in this document. Copyright by Volkswagen AG.

```
Read measured value block     HELP
Input display group number XX
```

- Press keys 0 and 1 for "Display group number 01" and confirm entry with Q key.

-> Indicated on display:
(1...4 = Display zones)

```
Read measured value block     1
     1     2     3     4
```

Do not continue with check until a 1 appears in display zone 4 - 8 digit number block - 00000010.

Note:

If at one or more positions a 1 is displayed in display zone 4, the test conditions have not been fulfilled:

=>Page 18 ; Relevance of figures in 8 digit number block

- Allow engine to idle for at least 1 minute.
- Check idling speed in display zone 1.
  Specification: 790...890 rpm1)

  1) Up-to-date specifications:

=> Exhaust emissions test binder

- Press ⇒key.
- Press keys 0 and 6 for the function "End output" and confirm entry with the Q key.

If the specification is not obtained:

- Perform basic setting => Page 37
- Carry out road test, interrogate fault memory again and repeat idling check.

If the specifications are again not attained:

- Check throttle valve control part
  => Page 48 .

Protected by copyright. Copyright by Volkswagen AG.
Copyright by Volkswagen AG. Volkswagen AG does not guarantee or accept any liability with respect to the correctness of information in this document. Copying for private or commercial purposes, in part or in whole, is not permitted unless authorised by Volkswagen AG.
satelettronica

1.11 - Performing basic setting

Note:

The basic setting matches the Simos control unit to the throttle valve control part with the ignition switched on.

Special tools, testers and auxiliary items

- Fault reader V.A.G 1551 or vehicle system tester V.A.G 1552 with cable V.A.G 1551/3

Test conditions

- No faults stored in fault memory
  => Page 4 , interrogating fault memory

Test sequence

- Switch ignition on.
- Interrogate fault memory, if necessary, repair fault and erase fault memory.
  => Page 4 , interrogating and erasing fault memory

- Then:

-> Indicated on display:

```
Rapid data transfer     HELP
Select function XX
```

- Press keys 0 and 4 for the function "Introduction of basic setting" and confirm entry with Q key.

-> Indicated on display:

```
Basic setting     HELP
Input display group number XX
```

- Press keys 0 and 1 for "Display group number 01" and confirm entry with Q key.

-> Indicated on display:
(1...4 = Display zones)

```
System in basic setting 1
     1     2     3     4
```

Note:

After confirming the display group number 01 the throttle valve positioner will be moved to the min., max. and three intermediate positions and the control unit will store each individual throttle valve angle in the permanent memory. The throttle valve will then remain in the start position.

- Terminate engine basic setting by pressing the⇒ button.
- Press keys 0 and 6 for the function "End output" and confirm entry with the Q key.
- Switch off ignition.

Note:

The ignition must remain switched off for at least 15 seconds so as to store the basic setting.

- Check the operating mode of the throttle valve control part => Page 49

1.12 - Checking Lambda probe and Lambda control

Special tools, testers and auxiliary items

- Fault reader V.A.G 1551 or vehicle system tester V.A.G 1552 with cable V.A.G 1551/3
- Test box V.A.G 1598/18
- Hand multimeter V.A.G 1526 or multimeter V.A.G 1715
- Adapter set V.A.G 1594
- Current flow diagram

Check conditions

- Coolant temperature at least 80 °C
- Exhaust system between catalyst and cylinder head free of leaks

Functional check

- Connect fault reader V.A.G 1551 (V.A.G 1552) and select engine electronics control unit with the "Address word" 01. When doing this the engine must be running at idling speed.
  (Connecting fault reader and selecting engine electronics control unit => Page 2 .)

-> Indicated on display:

```
Rapid data transfer     HELP
Select function XX
```

Protected by copyright. Copying or communication to third parties, in whole or in part, is not permitted unless authorised by Volkswagen AG. Volkswagen AG does not guarantee or accept any liability with respect to the correctness of information in this document. Copyright by Volkswagen AG.

satelettronica

- Press keys 0 and 8 for the function "Read measured value block" and confirm entry with Q key.

-> Indicated on display:

```
Read measured value block     HELP
Input display group number XX
```

- Press keys 0 and 5 for "Display group number 05" and confirm entry with Q key.

-> Indicated on display:
(1...4 = Display zones)

```
Read measured value block     5
     1     2     3     4
```

- Checking Lambda control operating condition in display zone 4:

Lambda control operating condition display:

- Lambda control on stop:

  5th position from right must display 0
  Display:: 00000000

- Lambda control active:

  4th position from right must display 1
  Display: 00001000

- Fault in fault memory:

  3rd position from right must display 0
  Display:: 00000000

- Lambda probe operationally ready:

  2nd position from right must display 1
  Display: 00000010

- Mixture:

  1st position from right must display 0 and 1 alternately
  Display: 00000001 (1 = rich mixture)
  Display: 00000000 (0 = lean mixture)

- Press C key.
- Press keys 0 and 1 for "Display group number 01" and confirm entry with Q key.

-> Indicated on display:
(1...4 = Display zones)

```
Read measured value block     1
     1     2     3     4
```

- Observe Lambda probe voltage in display zone 3. The voltage must fluctuate at least 30 time per minute
  in the range
  0.2...1.0 V.

Display	Cause	Continuation of check
approx. 2.51 V	Short to positive	=> Page 40 Checking basic voltage
approx. 1.52 V	Open circuit	=> Page 41 , Checking wiring

Protected by copyright. Copyright Volkswagen AG. Volkswagen AG does not guarantee or accept any liability with respect to the correctness of information in this document. Copyright by Volkswagen AG. Protected by copyright. Copyright Volkswagen AG. Volkswagen AG does not guarantee or accept any liability with respect to the correctness of information in this document. Copyright by Volkswagen AG. Protected by copyright. Copyright Volkswagen AG. Volkswagen AG does not guarantee or accept any liability with respect to the correctness of information in this document. Copyright by Volkswagen AG. Protected by copyright. Copyright Volkswagen AG. Volkswagen AG does not guarantee or accept any liability with respect to the correctness of information in this document. Copyright by Volkswagen AG. Protected by copyright. Copyright Volkswagen AG. Volkswagen AG does not guarantee or accept any liability with respect to the correctness of information in this document. Copyright by Volkswagen AG. Protected by copyright. Copyright Volkswagen AG. Volkswagen AG does not guarantee or accept any liability with respect to the correctness of information in this document. Copyright by Volkswagen AG. Protected by copyright. Copyright Volkswagen AG. Volkswagen AG does not guarantee or accept any liability with respect to the correctness of information in this document. Copyright by Volkswagen AG.
satelettronica

Display	Cause	Continuation of check
approx. 0.50 V	Short to wire 2	
approx. 0.15 V	Short to earth	
fluctuates between 0...1.1 V	Control OK.	---

- Press ⇒key.
- Press keys 0 and 6 for the function "End output" and confirm entry with the Q key.

If the specifications for Lambda control operating conditions are not attained or the probe voltage does not fluctuate as stated:

- Check Lambda probe heating => Page 42 .
- Check Lambda probe for soot. Renew if necessary.

Checking basic voltage

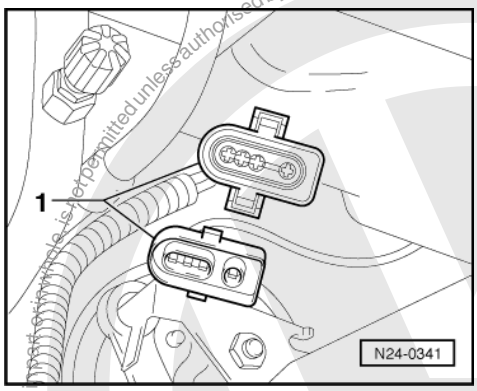

- -> Separate 4 pin connector (black) to Lambda probe before catalyst (G39) -1-.

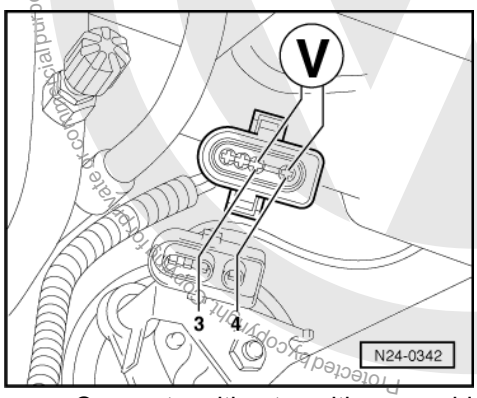

- -> Connect multimeter with aux. cables from V.A.G 1594 to measure voltage at contacts 3+4 (connector to engine control unit).
- Switch on ignition and measure basic voltage.
  Specification: 1.30...1.40 V
- Switch off ignition.

If the specification is not obtained:

- Check Lambda probe wiring
  => Page 41

If the specification is attained:

- Replace Lambda probe (G39).

Protected by copyright. Copyright by Volkswagen AG. Volkswagen AG does not guarantee or accept any liability with respect to the correctness of information in this document. Copyright by Volkswagen AG. Reproduction, transmission or publication to third parties is not permitted unless authorised by Volkswagen AG. Volkswagen AG does not guarantee or accept any liability with respect to the correctness of information in this document. Copyright by Volkswagen AG.
satelettronica

Checking Lambda probe wiring

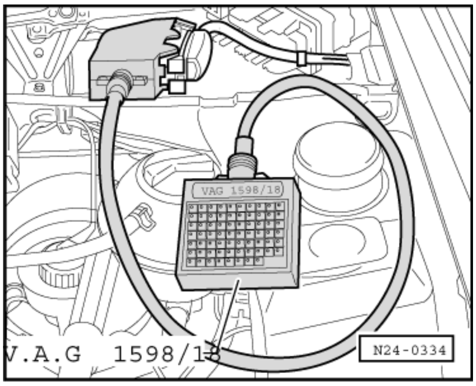

- -> Connect test box V.A.G 1598/18 to control unit wiring loom.

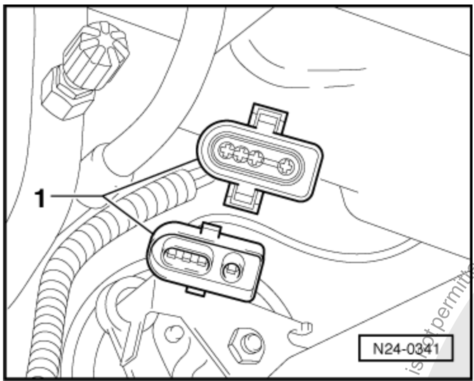

- -> Separate 4 pin connector (black) to Lambda probe before catalyst (G39) -1-.

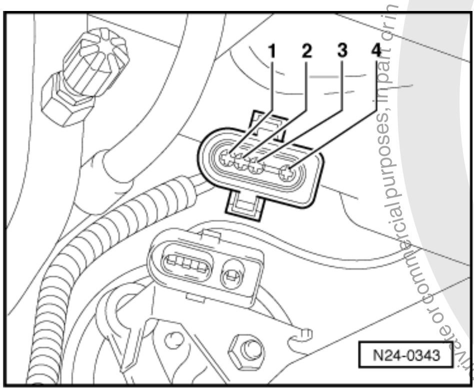

- -> Check wiring between test box and 4 pin connector for open circuit according to current flow diagram.
  Contact 3+socket 42
  Contact 4+socket 17
  Wire resistance: Max. 1.5 ω
- Check wiring at 4 pin connector for short to one another.
  Contact 1+socket 20
  Contact 1+socket 42
  Contact 1+socket 17
  Contact 2+socket 17
  Contact 2+socket 42
  Contact 3+socket 17
  Specification: ∞ω
- Check screening wire -test box socket 21- for short to the probe wiring according to current flow diagram.
  Contact 1+socket 21
  Contact 2+socket 21
  Contact 3+socket 21
  Contact 4+socket 21
  Specification: ∞ω

Protected by copyright. Copying for private or commercial purposes, in part or in whole, is not permitted unless authorised by Volkswagen AG. Volkswagen AG does not guarantee or accept any liability with respect to the correctness of information in this document. Copyright by Volkswagen AG.
sateletronica

- Additionally check all wiring for short to battery positive and to vehicle earth.

If a fault in wire is detected:

- Check wiring according to current flow diagram.

If no wiring fault is detected:

- Replace Lambda probe (G39).

1.13 - Checking Lambda probe heating

Special tools, testers and auxiliary items

- Test box V.A.G 1598/18
- Hand multimeter V.A.G 1526 or multimeter V.A.G 1715
- Adapter set V.A.G 1594
- Current flow diagram

Test conditions

- Fuel pump relay OK

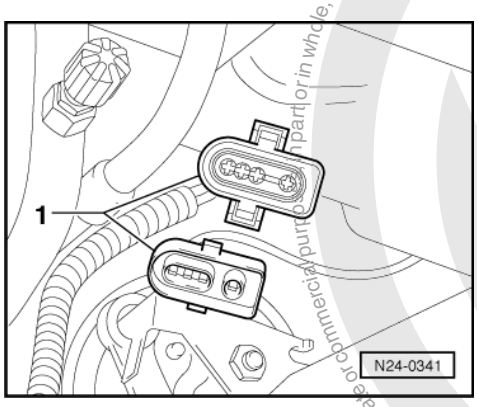

- Fuse 18 OK

Test sequence

- -> Separate 4 pin connector (black) to Lambda probe before catalyst (G39) -1-.

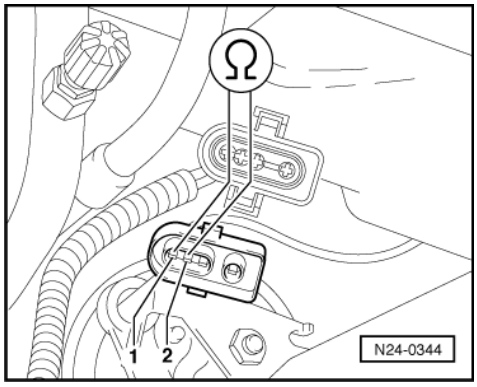

- -> Check probe heating at connector contacts 1+2 for continuity
  Specification: max. 200 ω

Protected by copyright. Copying for private or commercial purposes, in part or in whole, is not permitted unless authorised by Volkswagen AG. Volkswagen AG does not guarantee or accept any liability with respect to the correctness of information in this document. Copyright by Volkswagen AG.
satelettronica

If the specification is not attained:

- Replace Lambda probe (G39).

If the specification is attained:

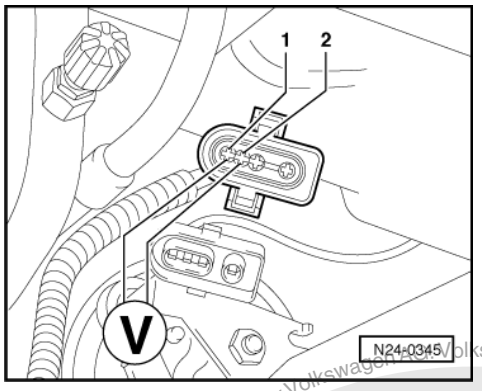

- -> Connect multimeter to measure voltage at contacts 1+2 of connector.
- Switch on ignition.
  Specification: approx. 4.5 V
- Start engine and run at idling speed.
- -> Connect multimeter to measure voltage at contacts 1+2 of connector.
- Switch off ignition.

If no voltage is present:

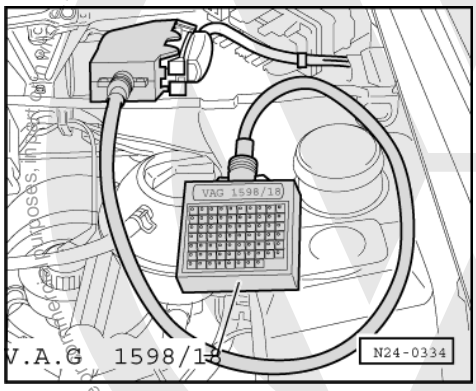

- -> Connect test box V.A.G 1598/18 to control unit wiring loom.

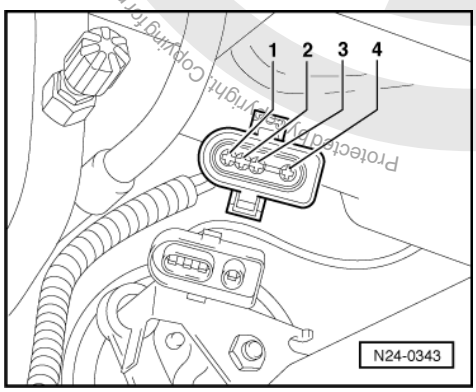

- -> Check wiring between test box and 4 pin connector for open circuit according to current flow diagram.
  Contact 2+socket 20
  Wire resistance: Max. 1.5 ω

If the specification is attained:

satelettronica

- Check wiring from contact 1 to fuel pump relay (J17) according to current flow diagram.

1.14 - Checking engine operating mode

Note:

Check establishes whether Simos control unit (J361) recognises the engine operating modes.

Special tools, testers and auxiliary items

- Fault reader V.A.G 1551 or vehicle system tester V.A.G 1552 with cable V.A.G 1551/3

Test conditions

- Coolant temperature at least 80 °C

Test sequence

- Connect fault reader V.A.G 1551 (V.A.G 1552) and select engine electronics control unit with the "Address word" 01. When doing this the engine must be running at idling speed.
  (Connecting fault reader and selecting engine electronics control unit => Page 2 .)

-> Indicated on display:

```
Rapid data transfer      HELP
Select function XX
```

- Press keys 0 and 8 for the function "Read measured value block" and confirm entry with Q key.

-> Indicated on display:

```
Read measured value block      HELP
Input display group number XX
```

- Press keys 0 and 4 for "Display group number 04" and confirm entry with Q key.

-> Indicated on display:
(1...4 = Display zones)

```
Read measured value block 4
     1     2     3     4
```

Display for operating modes:

- Overrun mode:

- Increase engine speed to above 3000 rpm.
- Close throttle abruptly.

  1st position from left must display 1 as long as the engine speed is above 1500 rpm
  Display: 10000000

- Idling:

  2nd position from left must display 1
  Display: 01000000

- Part throttle:

- Rev up evenly.

  3rd position from left must display 1

Copyright by Volkswagen AG. Volkswagen AG does not guarantee or accept any liability with respect to the correctness of information in this document. Copyright by Volkswagen AG. Reproduced by copyright. Copying for private or commercial purposes, in part or in whole is not permitted unless authorised by Volkswagen AG.
satelettronica

Display:: 00100000

- Full throttle:

- Floor accelerator pedal and release.

4th position from left must briefly display 1
Display: 00010000

Note:
Below 1500 rpm idling speed is again recognised.
- Press ⇒key.
- Press keys 0 and 6 for the function "End output" and confirm entry with the Q key.

If the specifications are not attained:
- Interrogate and erase fault memory, eliminate faults if necessary => Page 4 .
- Check accelerator mechanism for ease of operation.
- Check throttle valve potentiometer
  => Page 48 , checking throttle valve control part.

1.15 - Checking intake manifold change-over valve

Test conditions

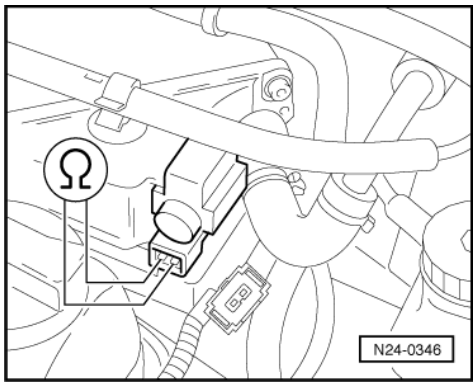

- Activation OK. =>Page 12 , Final control diagnosis

Checking voltage supply
- -> Pull 2 pin connector -1- off valve -2-.
- Connect multimeter to valve to measure resistance.
  Specification: 25...35 ω

If the specification is not obtained:
- Replace intake manifold change-over valve.

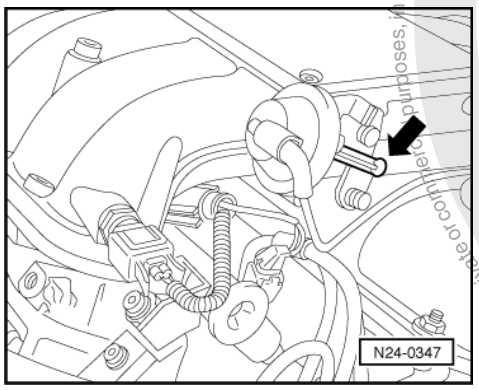

Protected by copyright. Copying for private or commercial purposes, in part or in whole, is not permitted unless authorised by Volkswagen AG. Volkswagen AG does not guarantee or accept any liability with respect to the correctness of information in this document. Copyright by Volkswagen AG.
satelettronica

Checking function

- Start engine and run at idling speed.
- -> Rev. up to 4000 rpm,
  the vacuum unit -arrow- must switch over.

If the vacuum unit does not switch over:

- Check vacuum hose/pipe to vacuum unit and vacuum unit.
- Check at lever if shaft is free to move.

If the following conditions are fulfilled:

- Activation (final control diagnosis) OK.
- Vacuum hose/pipe and vacuum unit OK.
- Shaft free to move

- Renew intake manifold change-over valve (N156) => Page 21 , item 5 .

1.16 - Checking air mass meter

Special tools, testers and auxiliary items

- Fault reader V.A.G 1551 or vehicle system tester V.A.G 1552 with cable V.A.G 1551/3
- Test box V.A.G 1598/18
- Hand multimeter V.A.G 1526 or multimeter V.A.G 1715
- Adapter set V.A.G 1594
- Current flow diagram

Test conditions

- Electrical consumers switched off (radiator fan must not run during the check)

Checking voltage supply

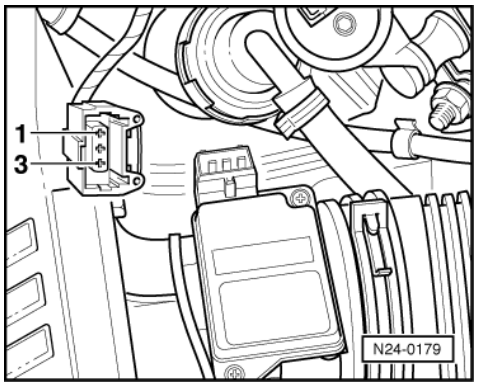

- -> Separate 3 pin connector to air mass meter.
- Connect multimeter to measure voltage at connector contacts 2+3.
- Switch on ignition
  Specification: min. 11 V
- Switch off ignition.
- Reconnect connector.

If no voltage is present:

- Check wiring =>Page 47

Protected by copyright. Copying for private or commercial purposes, in part or in whole, is not permitted unless authorised by Volkswagen AG. Volkswagen AG does not guarantee or accept any liability with respect to the correctness of information in this document. Copyright by Volkswagen AG.
satelettronica

Protected by copyright. Copyright by Volkswagen AG. Volkswagen AG does not guarantee or accept any liability with respect to the correctness of information in this document. Copyright by Volkswagen AG. Unauthorised reproduction, in whole or in part or in any form, for commercial purposes is not permitted without the express authorised by Volkswagen AG.

Test sequence

- Connect fault reader V.A.G 1551 (V.A.G 1552) and select engine electronics control unit with the "Address word" 01. When doing this the engine must be running at idling speed.
  (Connecting fault reader and selecting engine electronics control unit => Page 2 .)

-> Indicated on display:

```
Rapid data transfer      HELP
Select function XX
```

- Press keys 0 and 8 for the function "Read measured value block" and confirm entry with Q key.

-> Indicated on display:

```
Read measured value block      HELP
Input display group number XX
```

- Press keys 0 and 1 for "Display group number 01" and confirm entry with Q key.

-> Indicated on display:
(1...4 = Display zones)

```
Read measured value block      1
     1      2      3      4
```

Only continue with the test when

- The coolant temperature is above 80 °C
  -Display zone 2-

- Press C key.
- Press keys 0 and 3 for "Display group number 03" and confirm entry with Q key.

-> Indicated on display:
(1...4 = Display zones)

```
Read measured value block 3
     1      2      3      4
```

- Check engine load signal in display zone 2:
  Specification: 12...17 %

If the specification is not obtained:

- Check wiring =>Page 47

Checking wiring

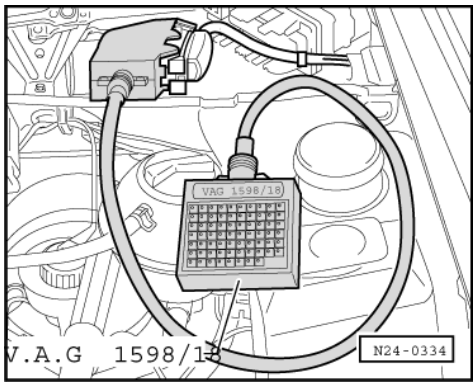

- -> Connect test box V.A.G 1598/18 to control unit wiring loom -arrow-.

satelettronica

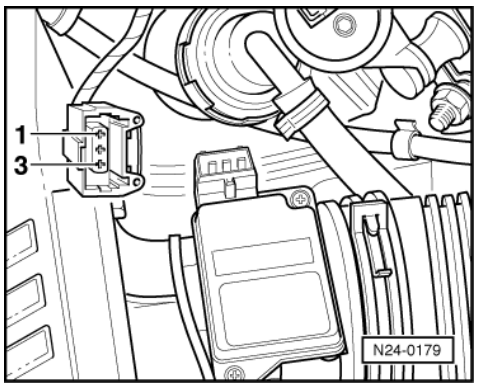

- -> Check wiring between test box and 3 pin connector for open circuit according to current flow diagram.
  Contact 1+socket 14
  Contact 2+socket 26
  Wire resistance: Max. 1.5 ω
- Check wiring at 3 pin connector for short to one another according to current flow diagram.
  Contact 3+socket 26
  Contact 3+socket 14
  Contact 2+socket 14
  Specification: ∞ω

If no wiring fault is detected:

- Check wiring from contact 3 to current supply relay (J363).
- Check current supply relay (J363).

=> Current flow diagrams, Electrical fault finding and Fitting locations binder

If no wiring fault is detected and current supply relay is OK:

- Renew air mass meter (G70).

1.17 - Checking throttle valve control part

Note:

If the throttle valve control part J338 is removed and installed or replaced the basic setting must be performed => Page 37 .

Special tools, testers and auxiliary items

- Fault reader V.A.G 1551 or vehicle system tester V.A.G 1552 with cable V.A.G 1551/3
- Test box V.A.G 1598/18
- Hand multimeter V.A.G 1526 or multimeter V.A.G 1715
- Adapter set V.A.G 1594

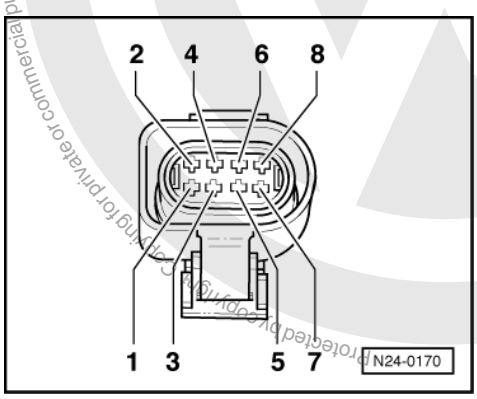

satelettronica

- Current flow diagram

Checking voltage supply

- -> Separate 8 pin connector to throttle valve control part.
- Connect multimeter using aux. cables from V.A.G 1594 to measure voltage at contacts 3+7 of connector.
- Switch on ignition.
  Specification: 9.0...14.5 V

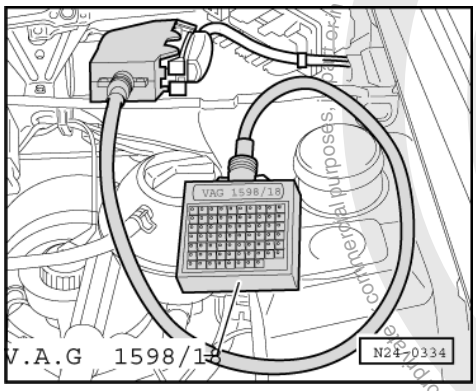

- Connect multimeter using aux. cables from V.A.G 1594 to measure voltage at contacts 4+7 of connector.
  Specification: 4.0...6.0 V
- Switch off ignition.

If the specifications are not attained:

- -> Connect test box V.A.G 1598/18 to control unit wiring loom.

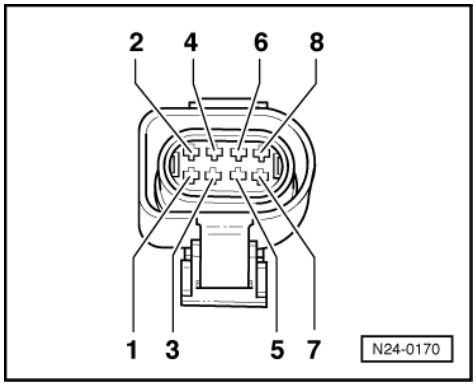

- -> Check wiring between test box and 8 pin connector for open circuit according to current flow diagram.
  Contact 3+socket 18
  Contact 4+socket 41
  Contact 7+socket 35
  Wire resistance: Max. 1.5 ω
- Check wiring at 8 pin connector for short to one another.
  Contact 7+socket 18
  Contact 7+socket 41
  Contact 4+socket 35
  Specification: ∞ω

If no wiring fault is detected:

- Renew Simos control unit (J361)
  =>Page 25 , item 9 .

Checking operating condition

- Connect fault reader V.A.G 1551 (V.A.G 1552) and select engine electronics control unit with the "Address word" 01. When doing this the ignition must be switched on.

Protected by copyright. Copyright by Volkswagen AG.
satelettronica

(Connecting fault reader and selecting engine electronics control unit => Page 2 .)

-> Indicated on display:

```
Rapid data transfer      HELP
Select function XX
```

- Press keys 0 and 8 for the function "Read measured value block" and confirm entry with Q key.

-> Indicated on display:

```
Read measured value block      HELP
Input display group number XX
```

- Press keys 0 and 7 for "Display group number 07" and confirm entry with Q key.

-> Indicated on display:
(1...4 = Display zones)

```
Read measured value block 1
     1     2     3     4
```

- Check throttle valve control part operating condition in display zone 4.
  Specification: 00000000

Relevance of figures in 8 digit number block for Lambda control and throttle valve control part.

Significance when display position = 1								
x	x	x	x	x	x	x	x	Throttle valve control part operating condition (display group 07)
1								Mechanical emergency running
	1							Not relevant
		1						Adaptation required
			1					Adaptation required
				1				Not relevant
					1			Adaptation terminated (battery voltage too low)
						1		Adaptation terminated (time exceeded)
							1	Idling speed switch open

If the specifications are not obtained:

- Perform basic setting => Page 37
- Repeat check.

Checking idling switch

- Connect fault reader V.A.G 1551 (V.A.G 1552) and select engine electronics control unit with the "Address word" 01. When doing this the ignition must be switched on.
  (Connecting fault reader and selecting engine electronics control unit => Page 2 .)

-> Indicated on display:

```
Rapid data transfer      HELP
Select function XX
```

- Press keys 0 and 8 for the function "Read measured value block" and confirm entry with Q key.

-> Indicated on display:

```
Read measured value block      HELP
Input display group number XX
```

- Press keys 0 and 1 for "Display group number 01" and confirm entry with Q key.

-> Indicated on display:

Protected by copyright. Copying for private or commercial purposes, in part or in whole, is not permitted unless authorised by Volkswagen AG. Volkswagen AG does not guarantee or accept any liability with respect to the correctness of information in this document. Copyright by Volkswagen AG.
satelettronica

(1...4 = Display zones)

```
Read measured value block 1
     1     2     3     4
```

- Check idling switch at idling stop in display zone 4.

  4th position from left must display 0
  Display: 00000000

- Slowly open throttle valve.

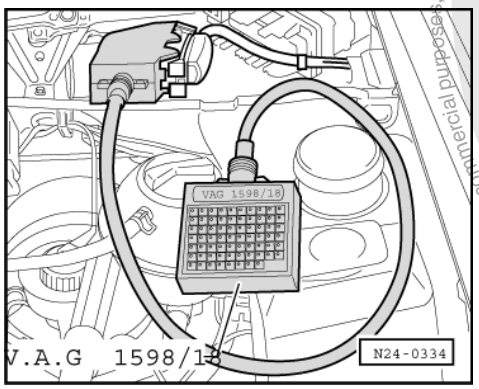

  4th position from left must display 1
  Display: 00010000

- Switch off ignition.

If the specifications are not obtained:

- -> Connect test box V.A.G 1598/18 to control unit wiring loom.
- With throttle valve closed connect multimeter to measure resistance at test box sockets 18+35.
  Specification: max. 1.5 ω
- Slowly open throttle valve.
  Specification: ∞ω

If the specifications are not obtained:

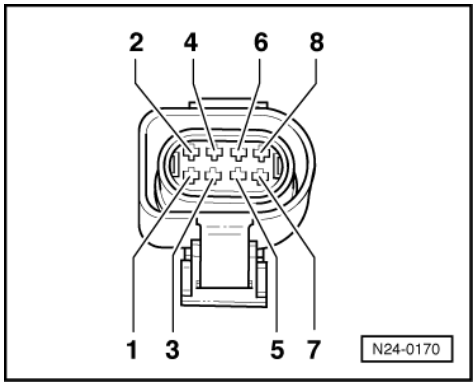

- -> Separate 8 pin connector to throttle valve control part.
- Check wiring between test box and 8 pin connector for open circuit according to current flow diagram.
  Contact 3+socket 18
  Contact 7+socket 35
  Wire resistance: Max. 1.5 ω
- Check wiring at 8 pin connector for short to one another.
  Contact 7+socket 18
  Specification: ∞ω

If no wiring fault is detected:

Protected by copyright. Copying for private or commercial purposes, in part or in whole, is not permitted unless authorised by Volkswagen AG. Volkswagen AG does not guarantee or accept any liability with respect to the correctness of information in this document. Copyright by Volkswagen AG.
satelettronica

- Replace throttle valve control part (J338).

Checking throttle valve potentiometer

- Connect fault reader V.A.G 1551 (V.A.G 1552) and select engine electronics control unit with the "Address word" 01. When doing this the ignition must be switched on.
  (Connecting fault reader and selecting engine electronics control unit => Page 2 .)

-> Indicated on display:

```
Rapid data transfer      HELP
Select function XX
```

- Press keys 0 and 8 for the function "Read measured value block" and confirm entry with Q key.

-> Indicated on display:

```
Read measured value block      HELP
Input display group number XX
```

- Press keys 0 and 3 for "Display group number 03" and confirm entry with Q key.

-> Indicated on display:
(1...4 = Display zones)

```
Read      measured value block 3
    1      2      3      4
```

- Read-off throttle valve angle in display zone 3.
  Specification: 3.0...4.5 <°
- Slowly open throttle valve and watch angle display in display zone 3.
  The figure must increase uniformly over
  the complete range.
- Press ⇒key.
- Press keys 0 and 6 for the function "End output" and confirm entry with the Q key.
- Switch off ignition.

Note:

The displayed figure is dependent on the tolerances of the throttle valve potentiometer and does not correspond to the actual opening angle. The maximum permissible displayed figure is 99.5 <°.

If the figure does not increase uniformly:

- Replace throttle valve control part (J338).

If the display shows constant 2 <°:

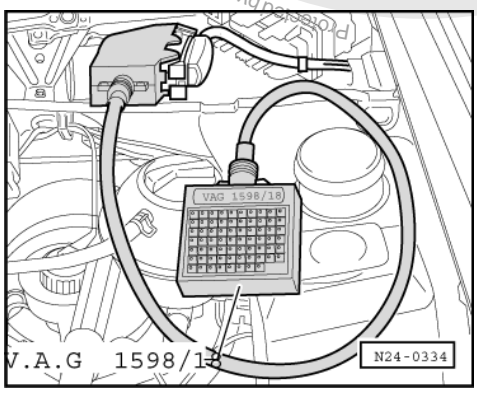

- -> Connect test box V.A.G 1598/18 to control unit wiring loom.
- Check wire for short to earth.
  Sockets 01+40
  Specification: ∞ω
- Switch ignition on.
- Check wire for short to positive, to do this connect multimeter to measure voltage at test box sockets 01+40
  note voltage if voltage present

Copyright by Volkswagen AG. Volkswagen AG does not guarantee or accept any liability with respect to the correctness of information in this document. Copyright by Volkswagen AG. Protected by copyright. Copying for private or commercial purposes, in part or in whole, is not permitted unless authorised by Volkswagen AG.
satelettronica

- Switch off ignition.

Continuation if voltage is present:

If voltage of about 5 V was present:

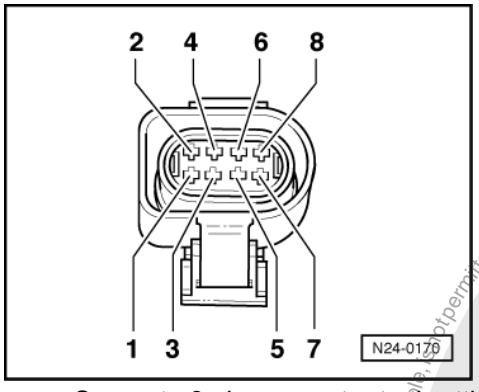

- -> Separate 8 pin connector to throttle valve control part.
- Switch ignition on.
- Check wiring at 8 pin connector contacts 4+5 for short to one another according to current flow diagram.

If the voltage was approx. battery voltage:

- Check wire at 8 pin connector contact 5 for short to battery positive according to current flow diagram.

Continuation if no voltage is present:

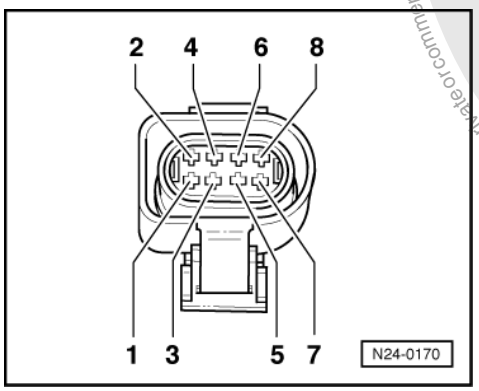

- -> Separate 8 pin connector to throttle valve control part.
- Check wiring between test box and 8 pin connector for open circuit according to current flow diagram.
  Contact 5+socket 40
  Wire resistance: Max. 1.5 ω

If no wiring fault is detected:

- Replace throttle valve control part (J338).

Checking throttle valve positioner and throttle valve positioner potentiometer

Test conditions

- Coolant temperature at least 80 °C

Test sequence

- Connect fault reader V.A.G 1551 (V.A.G 1552) and select engine electronics control unit with the "Address word" 01. When doing this the engine must be running at idling speed.

Protected by copyright. Copying for private or commercial purposes, in part or in whole, is not permitted unless authorised by Volkswagen AG. Volkswagen AG does not guarantee or accept any liability with respect to the correctness of information in this document. Copyright by Volkswagen AG.
satelettronica

(Connecting fault reader and selecting engine electronics control unit => Page 2 .)

-> Indicated on display:

```
Rapid data transfer      HELP
Select function XX
```

- Press keys 0 and 8 for the function "Read measured value block" and confirm entry with Q key.

-> Indicated on display:

```
Read measured value block      HELP
Input display group number XX
```

- Press keys 0 and 3 for "Display group number 03" and confirm entry with Q key.

-> Indicated on display:
(1...4 = Display zones)

```
Read measured value block 3
     1     2     3     4
```

- Check throttle valve positioner duty cycle at idling speed stop in display zone 4.
  Specification: 13...20 %

If the specification is not obtained:

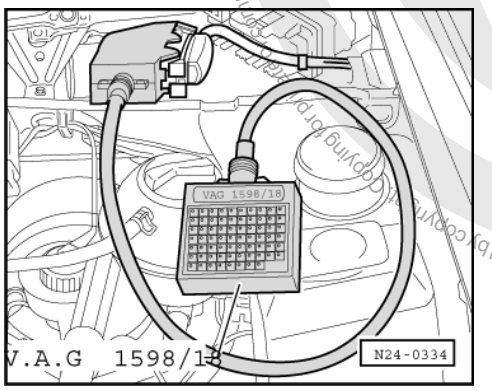

- -> Connect test box V.A.G 1598/18 to control unit wiring loom.
- With throttle valve closed connect multimeter to measure resistance at test box sockets 25+30.
  Specification: 3...200 ω

If the specification is not obtained:

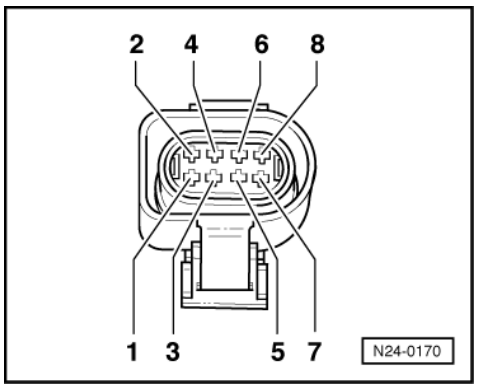

- -> Separate 8 pin connector to throttle valve control part.
- Check wiring between test box and 8 pin connector for open circuit according to current flow diagram.
  Contact 1+socket 30
  Contact 2+socket 25
  Contact 7+socket 35
  Contact 8+socket 28

Protected by copyright. Copying for private or commercial purposes, in part or in whole is not permitted unless authorised by Volkswagen AG. Volkswagen AG does not guarantee or accept any liability with respect to the correctness of information in this document. Copyright by Volkswagen AG.
satelettronica

Wire resistance: Max. 1.5 ω

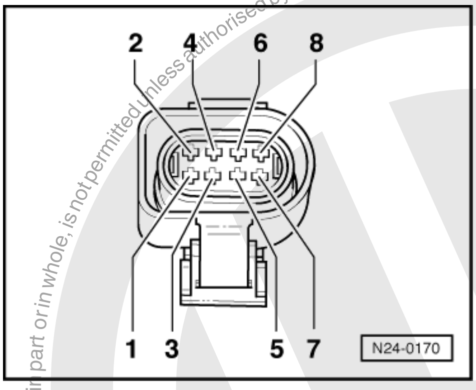

- -> Check wiring at 8 pin connector for short to one another.
  Contact 1+socket 25
  Contact 1+socket 28
  Contact 1+socket 35
  Contact 2+socket 28
  Contact 2+socket 35
  Contact 7+socket 28
  Specification: ∞ω

If no wiring fault is detected:

- Replace throttle valve control part (J338).

1.18 - Checking coolant temperature sender

Special tools, testers and auxiliary items

- Fault reader V.A.G 1551 or vehicle system tester V.A.G 1552 with cable V.A.G 1551/3
- Test box V.A.G 1598/18
- Hand multimeter V.A.G 1526 or multimeter V.A.G 1715
- Adapter set V.A.G 1594
- Current flow diagram

Test conditions

- Engine cold

Test sequence

- Connect fault reader V.A.G 1551 (V.A.G 1552) and select engine electronics control unit with the "Address word" 01. When doing this the engine must be running at idling speed.
  (Connecting fault reader and selecting engine electronics control unit => Page 2 .)

-> Indicated on display:

```
Rapid data transfer     HELP
Select function XX
```

- Press keys 0 and 8 for the function "Read measured value block" and confirm entry with Q key.

-> Indicated on display:

```
Read measured value block     HELP
Input display group number XX
```

- Press keys 0 and 1 for "Display group number 01" and confirm entry with Q key.

-> Indicated on display:

Protected by copyright. Copying for private or commercial purposes, in part or in whole, is not permitted unless authorised by Volkswagen AG. Volkswagen AG does not guarantee or accept any liability with respect to the correctness of information in this document. Copyright by Volkswagen AG.
satelettronica

(1...4 = Display zones)

```
Read measured value block     1
     1     2     3     4
```

Functional check of sender

- Observe coolant temperature figure in display zone 2. The temperature figure must Increase uniformly and without interruption.

  If a temperature figure is displayed which deviates greatly from the senders ambient temperature, check sender wiring for transfer resistances.

Notes:

- Depending upon the temperature level, the display on fault reader will jump by 2...5 °C
- If irregular engine running occurs in certain temperature ranges and the temperature figure does not increase without interruption, the temperature signal is temporarily interrupted and the sender must be renewed.

- Press ⇒key.
- Press keys 0 and 6 for the function "End output" and confirm entry with the Q key.

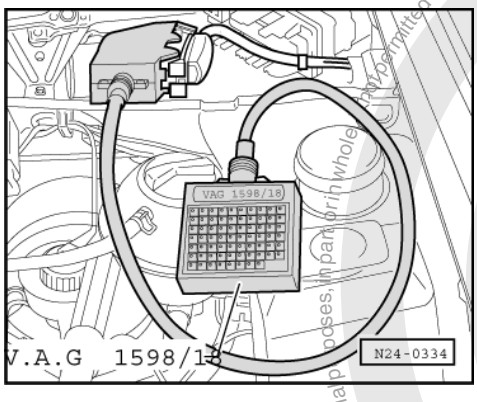

If the figure does not increase uniformly:

- Replace coolant temperature sender -2-.

If a G62 fault is indicated in fault memory even though the figure increases uniformly:

- Switch off ignition.
- -> Connect test box V.A.G 1598/18 to control unit wiring loom.

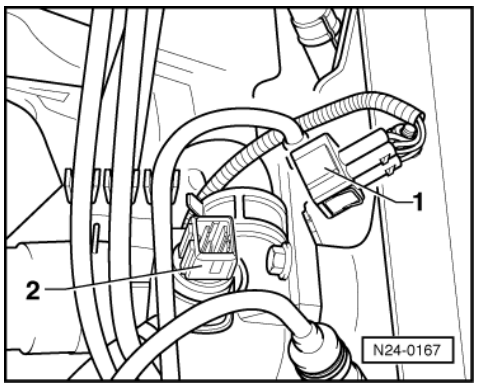

- -> Pull 4 pin connector -1- of coolant temperature sender (G62) -2-.

Protected by copyright. Copying for private or commercial purposes, in part or in whole, is not permitted unless authorised by Volkswagen AG. Volkswagen AG does not guarantee or accept any liability with respect to the correctness of information in this document. Copyright by Volkswagen AG.
satelettronica

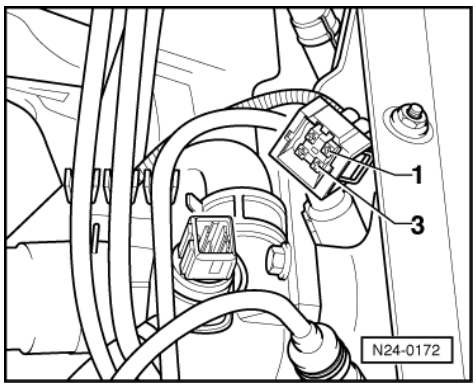

- -> Check wiring between test box and 4 pin connector for open circuit according to current flow diagram.
  Contact 1+socket 35
  Contact 3+socket 12
  Wire resistance: Max. 1.5 ω
- Check wire between control unit connector and 4 pin connector contact 3 for short to wire contact 1 and to vehicle earth, according to current flow diagram.
  Sockets 12 + 35
  Specification: ∞ω
- Additionally check wires for short to battery positive.
  Specification: ∞ω

If no fault in wire is detected:

- Perform resistance measurement at coolant temperature sender (G62) contacts 1+3, resistance figures => Page 35 , Fig. 1

If the specification is not obtained:

- Renew coolant temperature sender (G62) => Page 27 , item 23 .

1.19 - Checking intake air temperature sender

Special tools, testers and auxiliary items

- Fault reader V.A.G 1551 or vehicle system tester V.A.G 1552 with cable V.A.G 1551/3
- Test box V.A.G 1598/18
- Hand multimeter V.A.G 1526 or multimeter V.A.G 1715
- Adapter set V.A.G 1594
- Current flow diagram
- Chilling spray (commercially available)

Test sequence

- Connect fault reader V.A.G 1551 (V.A.G 1552) and select engine electronics control unit with the "Address word" 01. When doing this the ignition must be switched on.
  (Connecting fault reader and selecting engine electronics control unit => Page 2 .)

-> Indicated on display:

```
Rapid data transfer      HELP
Select function XX
```

- Press keys 0 and 8 for the function "Read measured value block" and confirm entry with Q key.

-> Indicated on display:

```
Read measured value block      HELP
Input display group number XX
```

satelettronica

- Press keys 0 and 2 for "Display group number 02" and confirm entry with Q key.

-> Indicated on display:
(1...4 = Display zones)

```
Read measured value block 2
     1      2      3      4
```

Functional check of sender

- Note intake air temperature figure in display zone 4.

Display	Cause	Continuation of check
approx. 20 °C	Open circuit or short to positive	=> Page 58
	Short to earth	
Approx. ambient temperature1)	---	=> Page 59

1) If a temperature is displayed which deviates greatly from the ambient temperature of the sender, check sender wiring for transfer resistances.

Continuation of check when display approx. 20 °C:

- Switch off ignition.

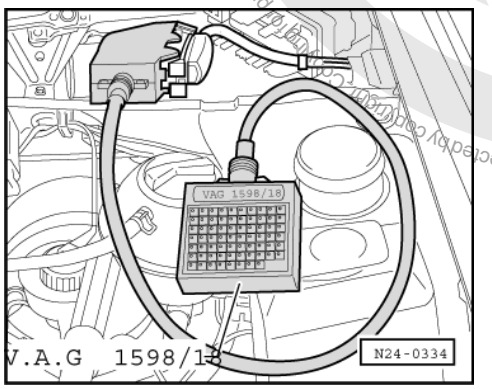

- -> Connect test box V.A.G 1598/18 to control unit wiring loom.

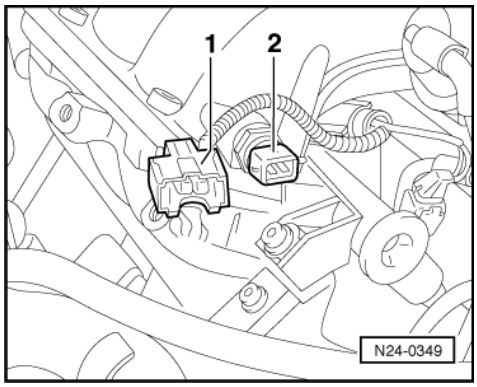

- -> Pull 2 pin connector -1- off intake air temperature sender (G42) -2-.

Protected by copyright. Copyright by Volkswagen AG. Volkswagen AG does not guarantee or accept any liability with respect to the correctness of information in this document. Copyright by Volkswagen AG. Privacy or in whole, is not permitted unless authorised by Volkswagen AG. Volkswagen AG does not guarantee or accept any liability with respect to the correctness of information in this document. Copyright by Volkswagen AG.
satelettronica

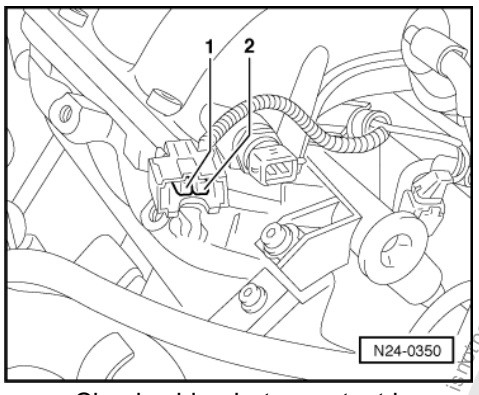

- -> Check wiring between test box and 2 pin connector for open circuit according to current flow diagram.
  Contact 1+socket 37
  Contact 2+socket 35
  Wire resistance: Max. 1.5 ω
- Check wire between control unit connector and 2 pin connector contact 2 for short to wire contact 1 and to vehicle earth, according to current flow diagram.
  Contact 2+socket 37
  Specification: ∞ω
- Additionally check wiring for short to battery positive.
  Specification: ∞ω

If no fault in wire is detected:

- Perform resistance measurement on intake air temperature sender (G42) contacts 1+2, resistance figures => Page 35 , Fig. 1

If the specification is not obtained:

- Renew intake air temperature sender (G42) =>Page 22 , item 15 .

Continuation of check when display = ambient temperature:

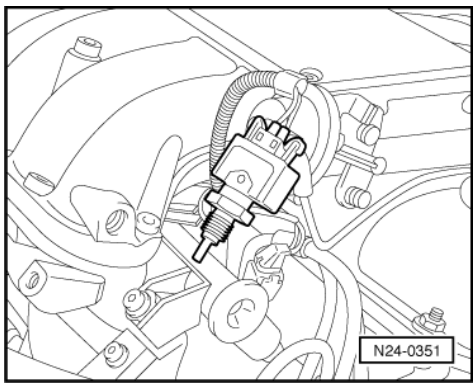

- -> Remove intake air temperature sender G42) (plug remains connected).
- Note intake air temperature figure in display zone 4.
- Spray sender with a commercial chilling spray and at the same time observe the temperature figure. The temperature figure must
  decrease.
- Press ⇒key.
- Press keys 0 and 6 for the function "End output" and confirm entry with the Q key.

Protected by copyright. Copying for private or commercial purposes, in part or in whole, is not permitted unless authorised by Volkswagen AG. Volkswagen AG does not guarantee or accept any liability with respect to the correctness of information in this document. Copyright by Volkswagen AG.
satelettronica

1.20 - Checking engine speed sender

Special tools, testers and auxiliary items

- Test box V.A.G 1598/18
- Hand multimeter V.A.G 1526 or multimeter V.A.G 1715
- Adapter set V.A.G 1594
- Current flow diagram

Test sequence

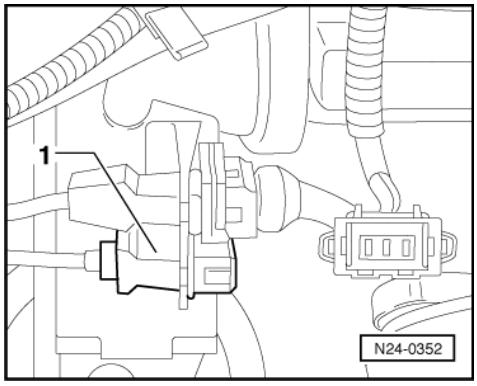

- -> Detach 3 pin connector to sender -1-.
- Switch ignition on.

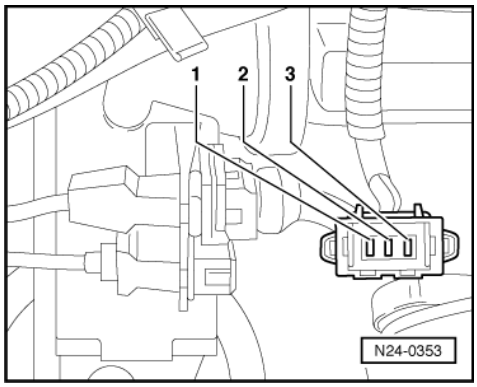

- -> Check voltage between contacts 1+3 of detached connector.
  Specification: Min. 9 V
- Switch off ignition.

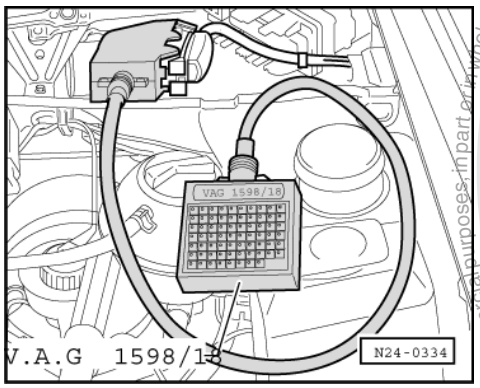

- -> Connect test box V.A.G 1598/18 to control unit wiring loom.

satelettronica
Protected by copyright. Copying for private or commercial purposes, in part or in whole, is not permitted unless authorised by Volkswagen AG. Volkswagen AG does not guarantee or accept any liability with respect to the correctness of information in this document. Copyright by Volkswagen AG.

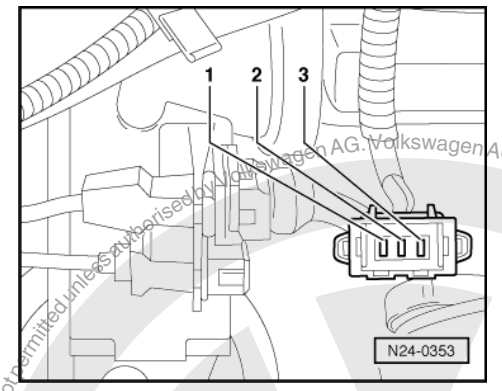

- -> Check wiring between test box and 3 pin connector for open circuit according to current flow diagram.
  Contact 1+socket 68
  Contact 2+socket 67
  Contact 3+socket 16
  Wire resistance: Max. 1.5 ω
- Additionally check wires for short to one another.
  Contact 1+socket 67
  Contact 1+socket 16
  Contact 2+socket 16
  Specification: ∞ω

If no wiring fault is detected and voltage was present between contacts 1+3:

- Replace engine speed sender (G28).

If no wiring fault is detected and no voltage was present between contacts 1+3:

- Renew Simos control unit (J361)
  =>Page 25 , item 9 .

1.21 - Checking speed signal

Special tools, testers and auxiliary items

- Fault reader V.A.G 1551 or vehicle system tester V.A.G 1552 with cable V.A.G 1551/3
- Hand multimeter V.A.G 1526 or multimeter V.A.G 1715
- Adapter set V.A.G 1594
- Current flow diagram

Test conditions

- Speedometer OK., checking:

=> Repair group 90, Electrical system

Note:

To check the speed signal the vehicle must be driven. To do this a second person is necessary.

Test sequence

- Connect fault reader V.A.G 1551 (V.A.G 1552) and select engine electronics control unit with the "Address word" 01. When doing this the engine must be running at idling speed.
  (Connecting fault reader and selecting engine electronics control unit => Page 2 .)

-> Indicated on display:

```
Rapid data transfer      HELP
Select function XX
```

Protected by copyright. Copyright by Volkswagen AG.
Volkswagen AG does not guarantee or accept any liability with respect to the correctness of information in this document. Copyright by Volkswagen AG.
Copying for private or commercial purposes, in part or in whole, is not permitted unless authorised by Volkswagen AG.
satelettronica

- Press keys 0 and 8 for the function "Read measured value block" and confirm entry with Q key.

-> Indicated on display:

```
Read measured value block     HELP
Input display group number XX
```

- Press keys 0 and 1 for "Display group number 01" and confirm entry with Q key.

-> Indicated on display:
(1...4 = Display zones)

```
Read measuring value block 4
     1     2     3     4
```

- Carry out test drive and when doing this observe display (2nd person necessary).
- Observe displayed figure in display zone 3:
  Specification: approx. driven speed
- Press ⇒key.
- Press keys 0 and 6 for the function "End output" and confirm entry with the Q key.

If no speed is indicated:

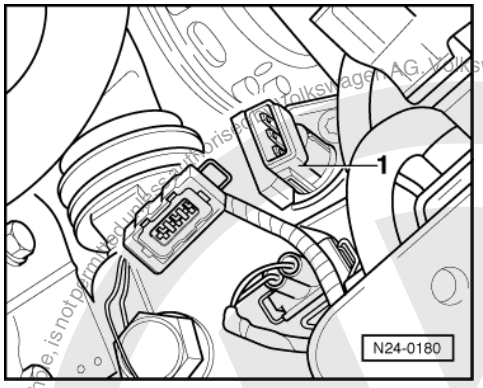

- -> Detach 3 pin connector from sender -1-.
- Switch ignition on.

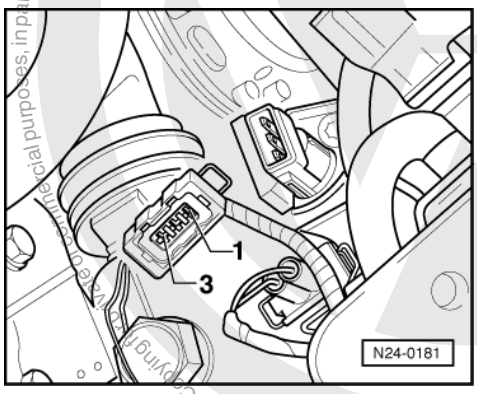

- -> Check voltage between contacts 1+3 of detached connector.
  Specification: Min. 9 V
- Switch off ignition.
- Reconnect connector

If no voltage was present:

- Check wiring according to current flow diagram.

If the specification is attained:

Volkswagen AG does not guarantee or accept any liability with respect to the correctness of information in this document. Copyright by Volkswagen AG.
Protected by copyright. Copying for private or commercial purposes, in part or in whole, is not permitted unless authorised by Volkswagen AG.
satelettronica

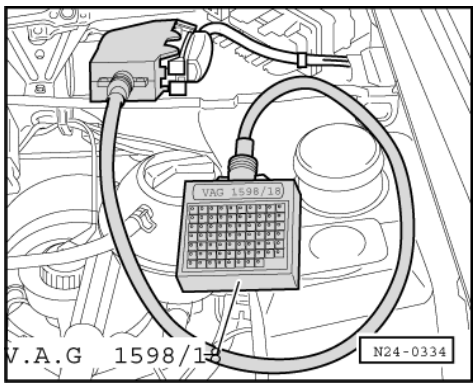

- -> Connect test box V.A.G 1598/18 to control unit wiring loom.
- Connect multimeter to measure voltage at sockets 1+11.
- Switch ignition on.
- Raise left front wheel or push vehicle. The voltage figure must fluctuate between 0...at least 4 V.

If no wiring fault is detected and voltage was present between contacts 1+3:

- Renew Simos control unit (J361)
  =>Page 25 , item 9 .

If the specification is not obtained:

- Check for wiring open circuit according to current flow diagram, if necessary replace speedometer sender (G22).

1.22 - Checking control unit voltage supply

Protected by copyright. Copying for private or commercial purposes, in part or in whole, is not permitted unless authorised by Volkswagen AG. Volkswagen AG does not guarantee or accept any liability with respect to the correctness of information in this document. Copyright by Volkswagen AG.

Special tools, testers and auxiliary items

- Fault reader V.A.G 1551 or vehicle system tester V.A.G 1552 with cable V.A.G 1551/3
- Test box V.A.G 1598/18
- Hand multimeter V.A.G 1526 or multimeter V.A.G 1715
- Adapter set V.A.G 1594
- Current flow diagram

Check conditions

- Battery voltage at least 11 V
- Alternator OK

Test sequence

Checking voltage supply via relay (J363)

- Connect fault reader V.A.G 1551 (V.A.G 1552) and select engine electronics control unit with the "Address word" 01. When doing this the engine must be running at idling speed.
  (Connecting fault reader and selecting engine electronics control unit => Page 2 .)

-> Indicated on display:

```
Rapid data transfer      HELP
Select function XX
```

- Press keys 0 and 8 for the function "Read measured value block" and confirm entry with Q key.

-> Indicated on display:

satelettronica

```
Read measured value block     HELP
Input display group number XX
```

- Press keys 0 and 2 for "Display group number 02" and confirm entry with Q key.

-> Indicated on display:
(1...4 = Display zones)

```
Read measured value block 2
     1     2     3     4
```

- Read off figure displayed in display zone 3.
  Specification: approx. battery voltage constant
- Press ⇒key.
- Press keys 0 and 6 for the function "End output" and confirm entry with the Q key.

If the displayed figure fluctuates or the battery voltage is not attained:

- Switch off ignition.

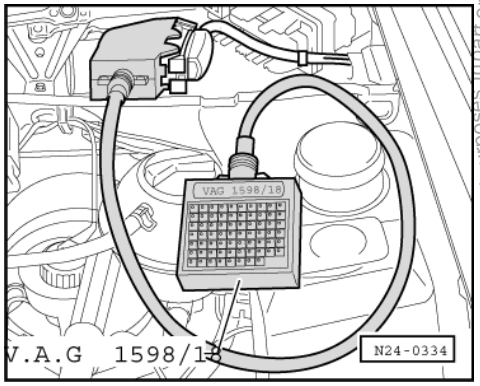

- -> Connect test box V.A.G 1598/18 to control unit wiring loom.
- Switch ignition on.
- Check supply voltage with multimeter and aux. cables from V.A.G 1594 between the test box sockets 1+8:
  Specification: Min. 9 V
- Check voltage with multimeter and aux. cables from V.A.G 1594 between test box sockets 1+23:
  Specification: Min. 11 V

If the specifications are not attained:

- Replace voltage supply relay (J363).

Checking voltage supply terminal 15

Test conditions

- Fuse 15 OK

- Check voltage supply with multimeter and aux. cables from V.A.G 1594 between test box sockets 1+38:
  Specification: Min. 11 V

If the specification is not obtained:

- Check wiring according to current flow diagram.

Volkswagen AG. Volkswagen AG does not guarantee or accept any liability with respect to the correctness of information in this document. Copying for private or commercial purposes, in part or in whole, is not permitted unless authorised by Volkswagen AG.
Reproduced by copyright. Copyright by Volkswagen AG.
satelettronica

1.23 - Matching engine electronic control unit to electronic immobilizer

Special tools, testers and auxiliary items

- Fault reader V.A.G 1551 or vehicle system tester V.A.G 1552 with cable V.A.G 1551/3

Test conditions

- Authorized vehicle key required

Work sequence

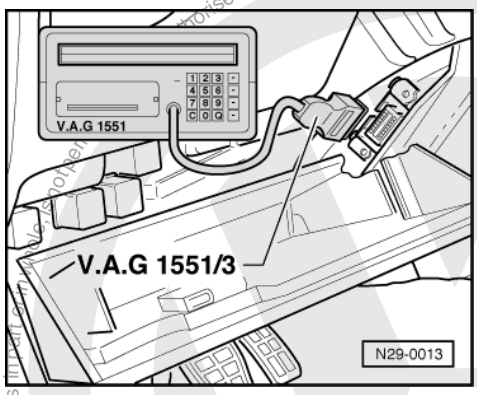

-> Fold driver's side stowage compartment down.
- Connect fault reader V.A.G 1551 or vehicle system tester V.A.G 1552 with cable V.A.G 1551/3.
- Switch on ignition.
- Operate fault reader or vehicle system tester taking into account the information on the display:
- Press key 1 for "Rapid data transfer".
- Press keys 2 and 5 for address word "Immobilizer" and confirm entry with Q key.
- Press the ⇒key.

-> Indicated on display:

```
Rapid data transfer      HELP
Select function XX
```

- Press keys 1 and 0 for function "Adaption" and confirm entry with Q key.

-> Indicated on display:

```
Adaption
Feed in channel number XX
```

- Press key 0 twice for "Channel number 0" and confirm entry with Q key.

-> Indicated on display:

```
Adaption     Q
Erase learnt values?
```

- Confirm input with Q key.

-> Indicated on display:

```
Adaption
Learnt values have been erased
```

- Conclude adaption by pressing ⇒ key.
- Press keys 0 and 6 for the function "End output" and confirm entry with the Q key.
- Switch off ignition.

Protected by copyright. Copying for private or commercial purposes, in part or in whole, is not permitted unless authorised by Volkswagen AG. Volkswagen AG does not guarantee or accept any liability with respect to the correctness of information in this document. Copyright by Volkswagen AG.
satelettronica

Note:
The identity of the engine control unit is read into the immobilizer control unit when next switching the ignition on.

1.24 - Checking air conditioner and air conditioner compressor signals

Special tools, testers and auxiliary items
- Fault reader V.A.G 1551 or vehicle system tester V.A.G 1552 with cable V.A.G 1551/3
- Test box V.A.G 1598/18
- Hand multimeter V.A.G 1526 or multimeter V.A.G 1715
- Adapter set V.A.G 1594
- Current flow diagram

Check conditions
- Function of air conditioner OK.
- Air conditioner switched off
- Interior of vehicle has room temperature (above 15 ° C)
- No faults stored in fault memory
  => Page 4 , interrogating fault memory

Test sequence
- Connect fault reader V.A.G 1551 (V.A.G 1552) and select engine electronics control unit with the "Address word" 01. When doing this the engine must be running at idling speed.
  (Connecting fault reader and selecting engine electronics control unit => Page 2 .)

-> Indicated on display:

```
Rapid data transfer      HELP
Select function XX
```

- Press keys 0 and 8 for the function "Read measured value block" and confirm entry with Q key.

-> Indicated on display:

```
Read measured value block      HELP
Input display group number XX
```

- Press keys 0 and 1 for "Display group number 01" and confirm entry with Q key.

-> Indicated on display:
(1...4 = Display zones)

```
Read measured value block      1
   1      2      3      4
```

- Observe 8 digit number block in display zone 4. 3rd position from left must display 0.
  Display: 00000000
- Switch on air conditioner. Adjust lowest temperature and highest blower stage.

  3rd position from left must now display 1
  Display: 00100000

If the display does not change:

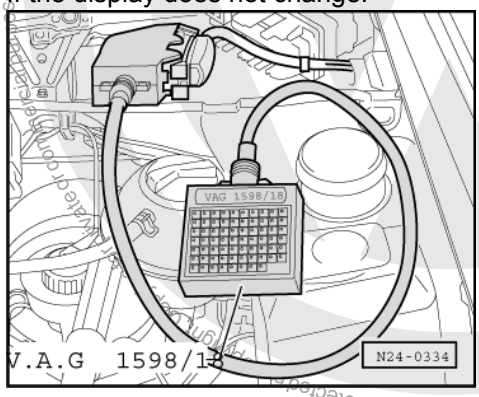

Protected by copyright. Copying, in part or in whole, is not permitted unless authorised by Volkswagen AG. Volkswagen AG does not guarantee or accept any liability with respect to the correctness of information in this document. Copyright by Volkswagen AG.

satelettronica

- -> Connect test box V.A.G 1598/18 to control unit wiring loom.
- Check wiring between test box sockets 13 and 39 and the air conditioner for open circuit according to current flow diagram.
  Wire resistance: Max. 1.5 ω

Protected by copyright. Copying for private or commercial purposes, in part or in whole, is not permitted unless authorised by Volkswagen AG. Volkswagen AG does not guarantee or accept any liability with respect to the correctness of information in this document. Copyright by Volkswagen AG.

1.25 - Checking starter signal

Special tools, testers and auxiliary items

- Test box V.A.G 1598/18

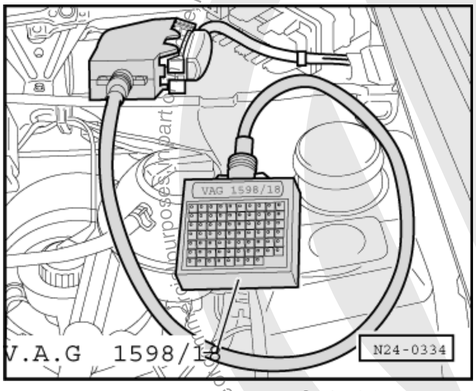

- Hand multimeter V.A.G 1526 or multimeter V.A.G 1715
- Adapter set V.A.G 1594
- Current flow diagram

Test sequence

- -> Connect test box V.A.G 1598/18 to control unit wiring loom.
- Connect multimeter to measure voltage at test box sockets 1+32.
- Operate starter. Multimeter must indicate
  min. 8 V.

If the specification is not obtained:

- Check wiring to starter terminal 50 according to current flow diagram.

1.26 - Checking injectors

Special tools, testers and auxiliary items

- Test box V.A.G 1598/18
- Hand multimeter V.A.G 1526 or multimeter V.A.G 1715
- Diode test lamp V.A.G 1527
- Adapter set V.A.G 1594
- Current flow diagram

Check conditions

- Engine speed sender OK.
- Fuel pump relay OK

Checking activation

- Remove intake manifold upper part, => Page 31 , item 8 .

satelettronica

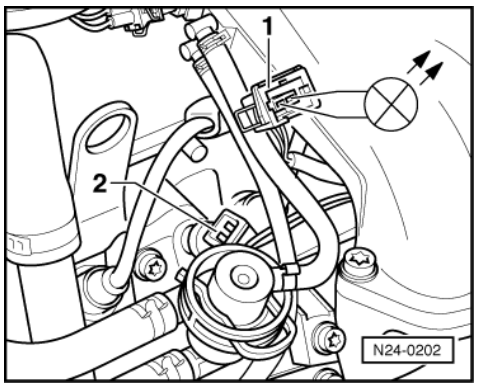

- -> Pull plug -1- off connection -2- and connect diode test lamp V.A.G 1527 with aux. cables from V.A.G 1594 to the contacts of the plug.
- Pull the connectors off injectors 2...4.
- Operate starter and check the voltage supply for No. 1 Cyl. injector.
  LED must flicker
- Repeat check on injectors 2...4.

The LED does not flicker:

- Switch off ignition.

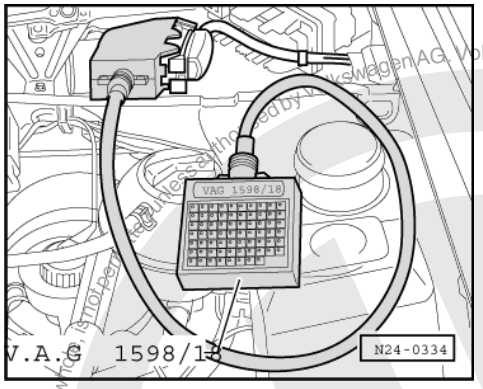

- -> Connect test box V.A.G 1598/18 to control unit wiring loom.

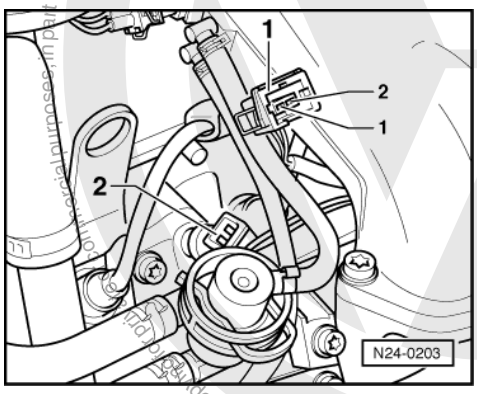

- -> Check wiring between test box and connector for open circuit according to current flow diagram.
  Injector 1: Contact 2+socket 02
  Injector 2: Contact 2+socket 46
  Injector 3: Contact 2+socket 47
  Injector 4: Contact 2+socket 48
  Wire resistance: Max.1.5 ω
- Check wiring between connector for injectors contact 1 and relay plate for open circuit according to current flow diagram.
  Wire resistance: Max. 1.5 ω
- Additionally check wires for short to one another.

satelettronica

Specification: ∞ω

Checking resistance of injectors

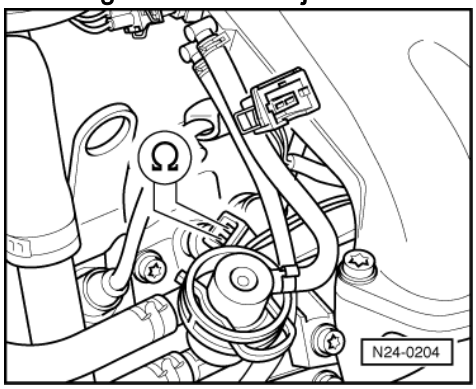

- -> Check resistance of injectors individually
  Specification: 15...20 ω

If the specification is not attained, replace injector(s) as necessary.

Checking spray pattern and for leaks

> Warning!
> The fuel system is pressurized! Before loosening hose connections or opening the test connection, wrap a cloth around the connection. Then release pressure by carefully pulling off the hose/sealing cap.

Special tools, testers and auxiliary items

- Adapter set V.A.G 1594
- Digital potentiometer V.A.G 1630
- Measuring unit V.A.G 1602

Test sequence

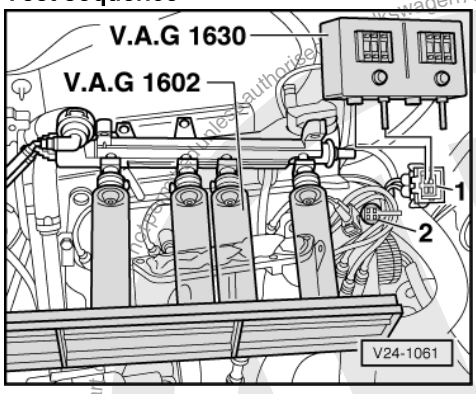

- Remove intake manifold upper part, => Page 31 , item 8 .
- Remove fuel manifold complete with injectors => Page 21 , Item 3 .
- -> Hold injectors in the measuring appliance V.A.G 1602.

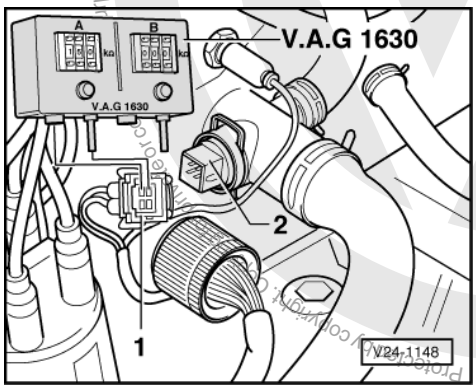

satelettronica
Volkswagen AG. Volkswagen AG does not guarantee or accept any liability with respect to the correctness of information in this document. Copyright by Volkswagen AG.

- -> Pull plug off coolant temperature sender (G62).
- Set digital potentiometer V.A.G 1630 -side A- to 15 kωand using aux. cables from V.A.G 1594 connect to contacts 1+3 of disconnected plug.
- Pull plug off ignition transformer.
- Operate starter (2nd person required). The injectors must pulsate and spray in accordance with firing order.
- Switch off ignition and check injectors for leaks. No more than
  2 drops/min
  may leak from each injector.

Note:

When installing the injectors ensure that the O rings

are not damaged.

1.27 - Checking fuel pressure regulator and holding pressure

The fuel pressure regulator controls the fuel pressure dependent upon intake manifold pressure.

The specifications are dependent upon the fuel pump working pressure. This is
approx. 4 bar

Special tools, testers and auxiliary items

- Pressure tester V.A.G 1318
- Adapter 1318/10
- Adapter 1318/11
- Adapter 1318/16

Test sequence

Warning!
The fuel system is pressurized! Before loosening hose connections or opening the test connection, wrap a cloth around the connection. Then release pressure by carefully pulling off the hose/sealing cap.

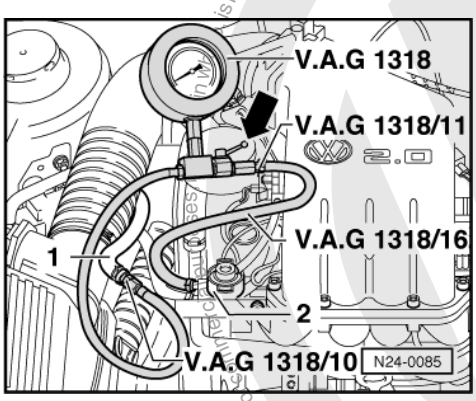

- -> Pull fuel supply pipe -1- off fuel manifold connection -2- and connect to pressure gauge V.A.G 1318 using adapter 1318/10.
- Connect pressure gauge V.A.G 1318 to fuel manifold -2- using adapter 1318/11 and 1318/16. Open pressure gauge cut-off tap (handle in throughflow direction -arrow-).
- Start the engine and run at idling speed.
- Check fuel pressure.
  Specification: Approx. 2.5 bar

If the specification is not obtained:

- Check quantity supplied by fuel pump.

Protected by copyright. Copyright by Volkswagen AG. Volkswagen AG does not guarantee or accept any liability with respect to the correctness of information in this document. Copyright by Volkswagen AG.
satelettronica

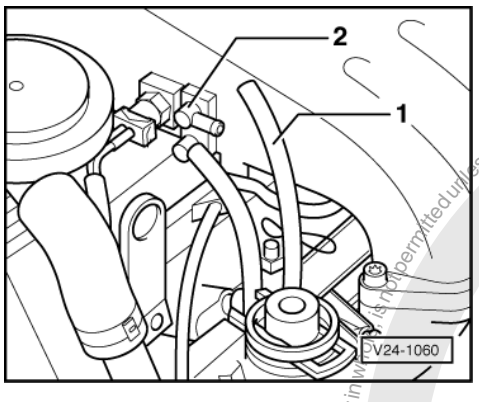

=> Rep. Gr. 20; Removing and installing parts of fuel system; checking fuel pump

If the specification is attained:

- -> Pull vacuum hose - 1- off connection -2-. The fuel pressure must rise to approx. 3.0 bar.
- Switch off ignition.
- Check for leaks and holding pressure by observing pressure drop on gauge. After 10 minutes there must be a residual pressure of at least 2.0 bar.

If the holding pressure drops below 2 bar:

- Start the engine and run at idling speed.

When the fuel pump has built-up the pressure again:

- Switch off ignition and use a second mechanic to seal the return pipe -with blue marking- on fuel manifold with a clamp.
- Watch pressure drop on gauge.

If the pressure does not drop:

- Renew fuel pressure regulator => Page 22 , item 19 .

If the pressure drops again:

- Check pressure gauge for leaks.
- Check pipe connections, O rings on fuel manifold and injectors for leaks.
- Check fuel pump non-return valve:

=> Rep. Gr. 20; Removing and installing parts of fuel system; checking fuel pump

When the pressure gauge is removed after completing the test:

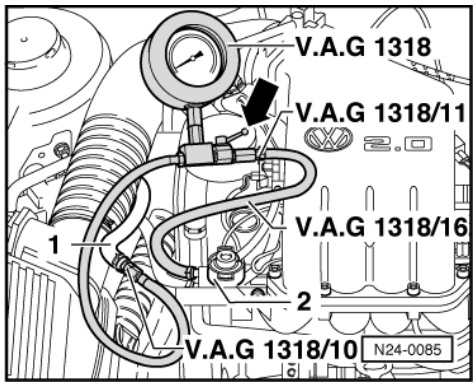

Copyright by Volkswagen AG. Protected by copyright. Copying for private or commercial purposes, in part or in whole, is not permitted unless authorised by Volkswagen AG. Volkswagen AG does not guarantee or accept any liability with respect to the correctness of information in this document.
satelettronica

- Switch off ignition.
- Hold a measuring container before the pressure gauge cut-off tap.
- -> Open pressure gauge cut-off tap -arrow- carefully and release pressure.

1.28 - Checking intake air system for leaks (unmetered air)

Checking with engine leak detector spray G 001 800 A1

Special tools, testers and auxiliary items

- Fault reader V.A.G 1551 or vehicle system tester V.A.G 1552 with cable V.A.G 1551/3
- Engine leak detector spray G 001 800 A1

Notes:

- The vacuum in the intake system will cause the leak detector spray to be drawn in with the outside air. The leak detector spray reduces the ignitability of the mixture. This leads to a drop in engine speed and to a significant increase of the CO content.
- The safety precautions listed on the container must be adhered to.

Test sequence

- Connect fault reader V.A.G 1551 (V.A.G 1552) and select engine electronics control unit with the "Address word" 01. When doing this the engine must be running at idling speed.
  (Connecting fault reader and selecting engine electronics control unit => Page 2 .)

-> Indicated on display:

```
Rapid data transfer      HELP
Select function XX
```

- Press keys 0 and 8 for the function "Read measured value block" and confirm entry with Q key.

-> Indicated on display:

```
Read measured value block     HELP
Input display group number XX
```

- Press keys 0 and 1 for "Display group number 01" and confirm entry with Q key.

-> Indicated on display:
(1...4 = Display zones)

```
Read measured value block 1
     1     2     3     4
```

- Note engine speed in display zone 1.
- Note Lambda probe voltage in display zone 3 and the area it fluctuates in.
- Systematically spray parts of the intake system with engine leak detector spray.

Engine speed or Lambda probe voltage does not change:

- Press the ⇒key.
- Press keys 0 and 6 for the function "End output" and confirm entry with the Q key.

If the engine speed drops or the Lambda probe voltage changes:

- Press the ⇒key.
- Press keys 0 and 6 for the function "End output" and confirm entry with the Q key.
- Check sprayed areas of intake system for leaks and rectify if necessary.

Protected by copyright. Copying for private or commercial purposes, in part or whole, is not permitted unless authorised by Volkswagen AG. Volkswagen AG does not guarantee or accept any liability with respect to the correctness of information in this document. Copyright by Volkswagen AG.
satelettronica

28 - Ignition system

1 - Simos injection and ignition system

1.1 - Simos injection and ignition system

1.2 - Servicing ignition part

Notes:

- Only the components which specifically relate to the ignition system are dealt with here. For the other components of the injection and ignition system

=> Repair group 24

- The injection and ignition system control unit is equipped with self diagnosis.
- Components marked with a * are checked via the self diagnosis.
- Before carrying out repairs and for fault finding, interrogate fault memory => Page 4 , interrogating and erasing fault memory
- During some checks it is possible that the control unit will recognise and store a fault. Therefore after completing all checks and repairs the fault memory must be interrogated and if necessary erased.
  => Page 4 , interrogating fault memory

Safety precautions => Page 77

Test data, spark plugs => Page 77

Protected by copyright. Copyright for private or commercial purposes, in part or in whole, is not permitted unless authorised by Volkswagen AG. Volkswagen AG does not guarantee or accept any liability with respect to the correctness of information in this document. Copyright by Volkswagen AG.
satelettronica

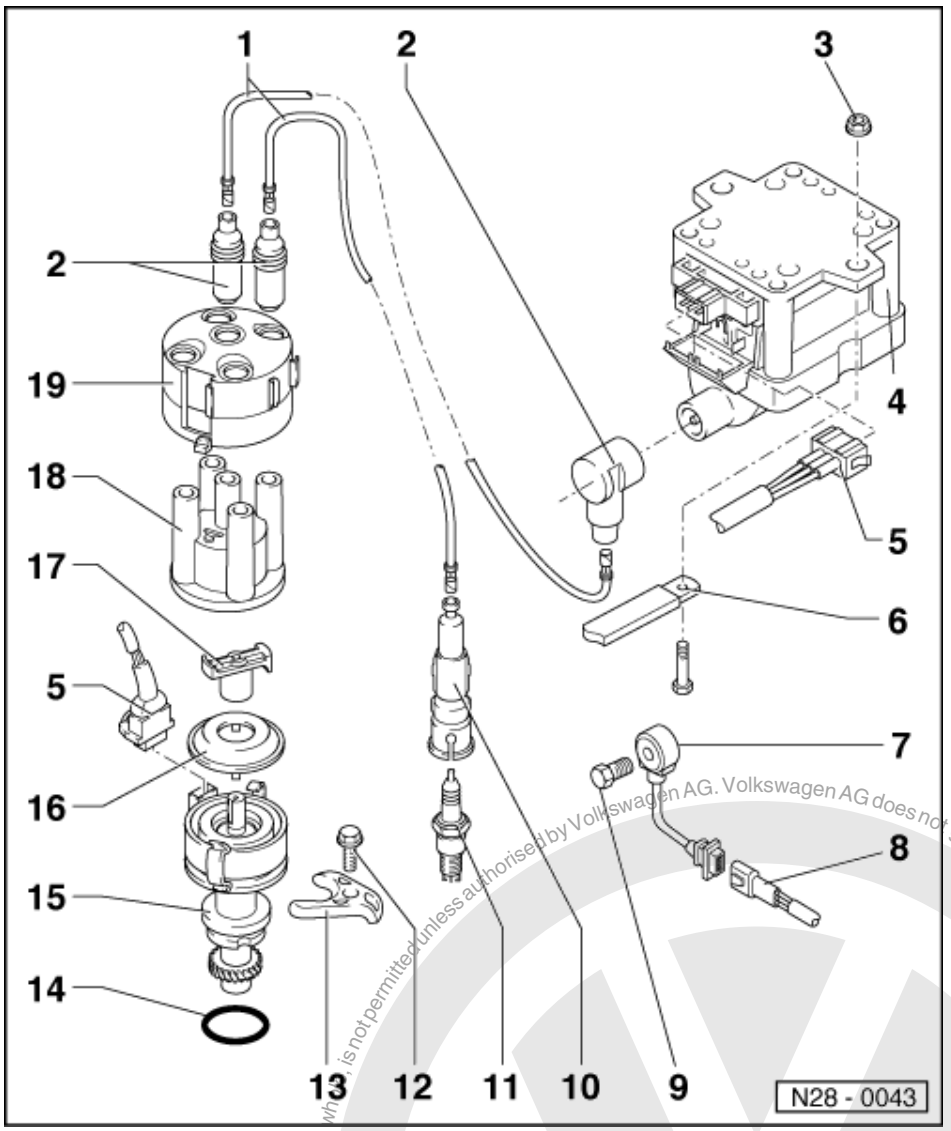

Note:

Simos control unit (J361) with connector => Page 20 , item 8*

1 H.T. cable
- Check for continuity

2 Suppressor
- 0.6...1.4 kω

3 10 Nm

4 Ignition transformer (N152)
- With output stage (N157)
- Checking => Page 85

5 Connector
- 3 pin

6 Earth strap

7 Knock sensor 1 (G61)*
- Checking => Page 83

Protected by copyright. Copying for private or commercial purposes, in part or in whole, is not permitted unless authorised by Volkswagen AG. Volkswagen AG does not guarantee or accept any liability with respect to the correctness of information in this document. Copyright by Volkswagen AG.
satelettronica

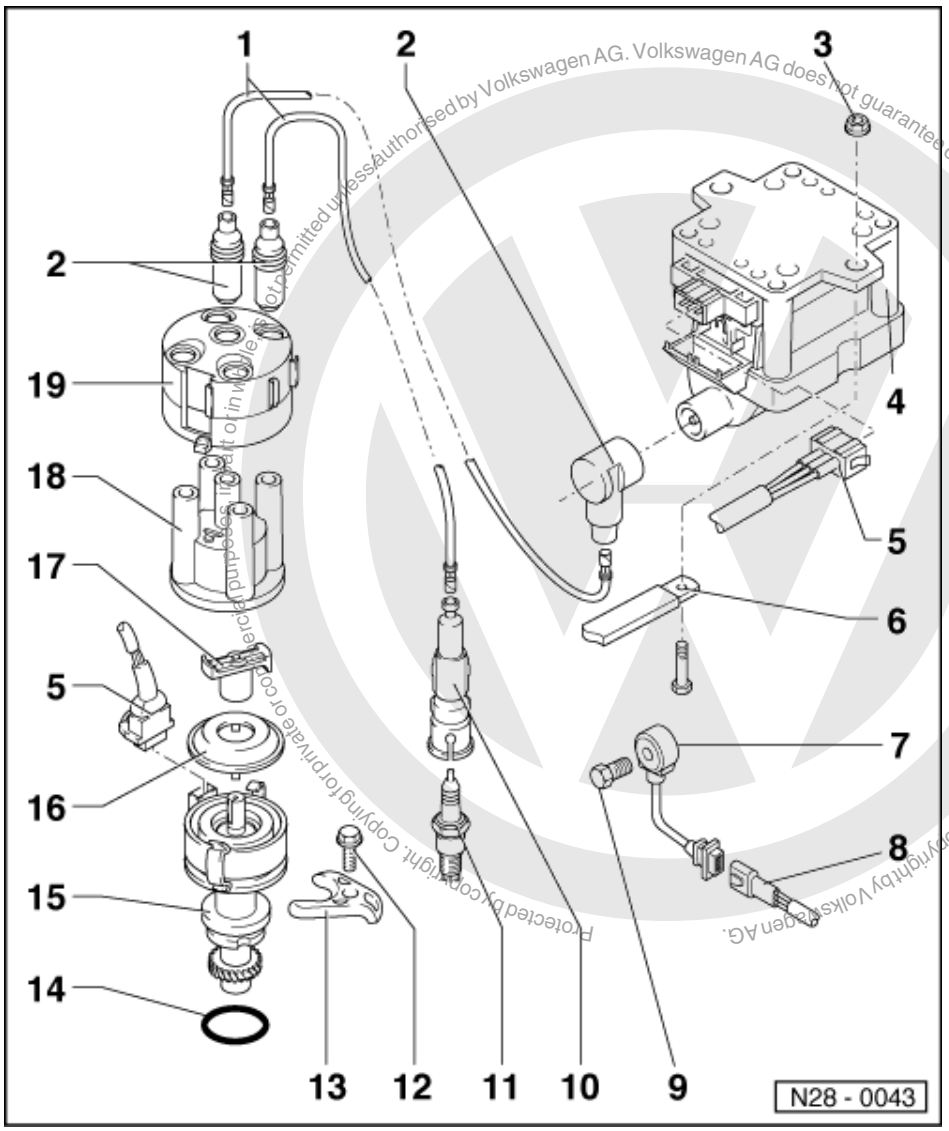

Protected by copyright. Copying for private or commercial purposes, in part or in whole, is not permitted unless authorised by Volkswagen AG. Volkswagen AG does not guarantee or accept any liability with respect to the correctness of information in this document. Copyright by Volkswagen AG.

8 3 pin connector
- Blue

9 20 Nm
- Tightening torque influences the function of the knock sensor

10 Spark plug connector
- 4...6 kω

11 Spark plug, 30 Nm
- Type and electrode gap
  => Page 77 , test data, spark plugs

12 25 Nm

13 Clamp

14 O ring
- Renew if damaged

satelettronica

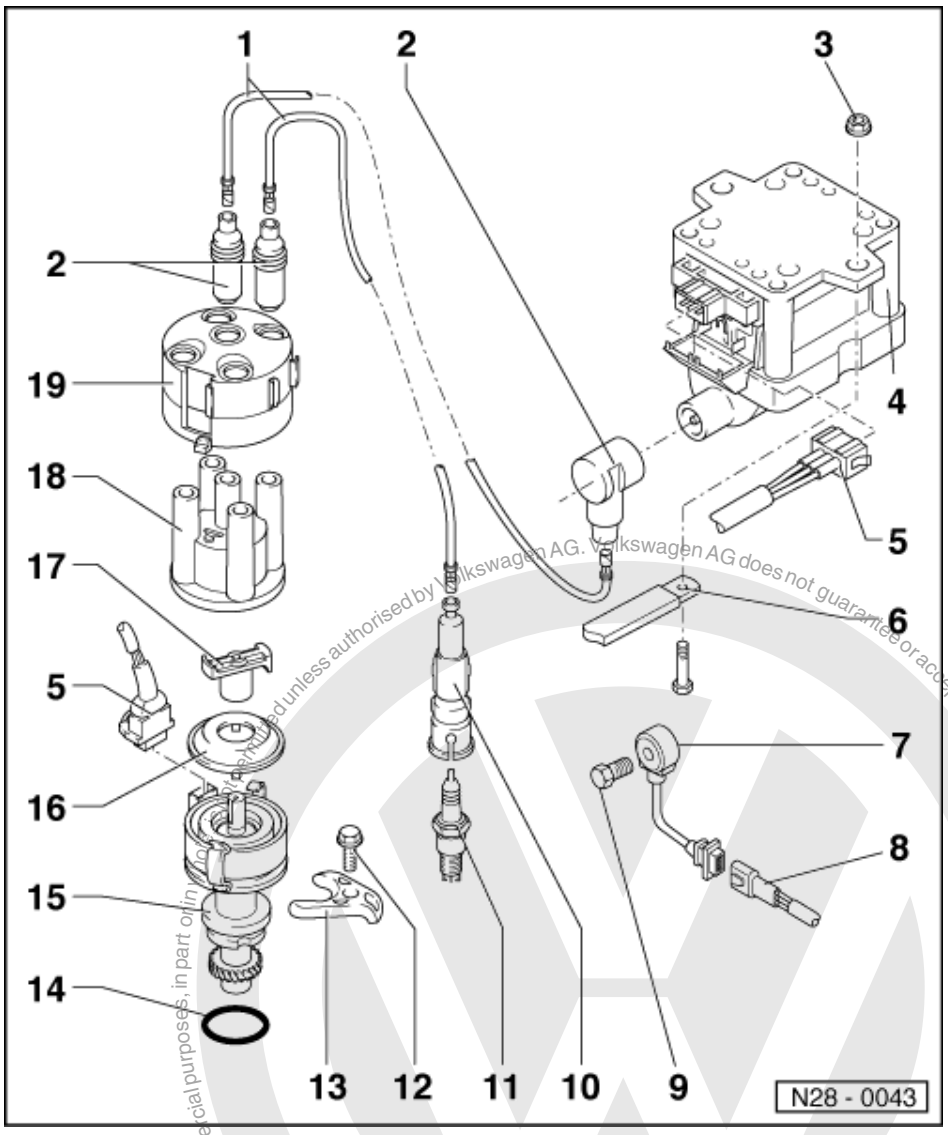

15 Distributor with Hall sender (G40)*

- Removing and installing => Page 78
- Checking Hall sender
  => Page 82

16 Dust cap

17 Rotor arm

- Marking: R1
- 0.6...1.4 kω

18 Distributor cap

- Check for cracks and signs of tracking
- Check contact wear
- Clean before fitting
- Check carbon brush for wear and freedom of movement

19 Screening cap

Protected by copyright. Copying for private and commercial purposes, in part or in whole, is not permitted unless authorised by Volkswagen AG. Volkswagen AG does not guarantee or accept any liability with respect to the correctness of information in this document. Copyright by Volkswagen AG.
satelettronica

1.3 - Safety precautions

To prevent injuries to persons and/or damage to the injection and ignition system, the following must be observed:

- Do not touch or pull off ignition wiring when engine is running or turning at starter speed.
- The ignition must be switched off when disconnecting or connecting injection and ignition system wiring as well as test instrument cables.
- If the engine is to be turned at starter speed, without starting, e.g. when checking compressions, pull 3 pin connector off ignition transformer.

1.4 - Test data, spark plugs

Engine code	AFT
Ignition timing1)	
Checking position of distributor	=>Page 77
Checking ignition timing control	=>Page 82
Ignition timing	1-3-4-2
Spark plugs2)	
VW/Audi	101 000 033 AC
Manufacturer's designation	BKUR 5 ET
Electrode gap	0.7...0.9 mm
Tightening torque	30 Nm

1) Not adjustable

2) Up-to-date specifications:

=> Exhaust emissions test binder

1.5 - Checking position of distributor

Note:

The position of the distributor does not influence the ignition timing.

Special tools, testers and auxiliary items

- Fault reader V.A.G 1551 or vehicle system tester V.A.G 1552 with cable V.A.G 1551/3

Test sequence

- Connect fault reader V.A.G 1551 (V.A.G 1552) and select engine electronics control unit with the "Address word" 01. When doing this the engine must be running at idling speed.
  (Connecting fault reader and selecting engine electronics control unit => Page 2 .)

-> Indicated on display:

```
Rapid data transfer      HELP
Select function XX
```

- Press keys 0 and 8 for the function "Read measured value block" and confirm entry with Q key.

-> Indicated on display:

Protected by copyright. Copyright by Volkswagen AG. Volkswagen AG does not guarantee or accept any liability with respect to the correctness of information in this document. Copyright by Volkswagen AG. Copying, in part or in whole, is not permitted unless authorised by Volkswagen AG. Volkswagen AG does not guarantee or accept any liability with respect to the correctness of information in this document. Copyright by Volkswagen AG.
satelettronica

```
Read measured value block     HELP
Input display group number XX
```

- Press keys 0 and 7 for "Display group number 07" and confirm entry with Q key.

-> Indicated on display:
(1...4 = Display zones)

```
Read measured value block 1
     1     2     3     4
```

- Read off figure displayed in display zone 1.
  Specification: 57...60 or 1
- Read off figure displayed in display zone 2.
  Specification: 5...8
- Press ⇒key.
- Press keys 0 and 6 for the function "End output" and confirm entry with the Q key.

If the specifications are not attained:
- Check alignment of TDC marks on distributor => Page 78 , removing and installing distributor

If the TDC marks align:

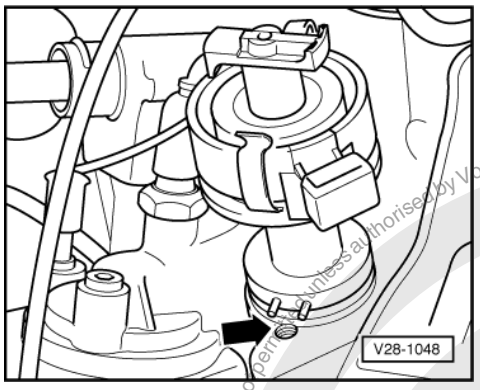

- -> Pull out pins on distributor (if fitted) and turn distributor until the specifications in display zones 1 and 2 are achieved.

1.6 - Removing and installing distributor

Special tools, testers and auxiliary items

- Pin wrench Matra V159
- Torque wrench V.A.G 1331 (5 - 50 Nm)

Note:
The Simos control unit requires the No. 1 cylinder TDC signal from the Hall sender to coordinate the injection and knock sensor systems according to the firing order.

Checking No. 1 cylinder TDC markings:

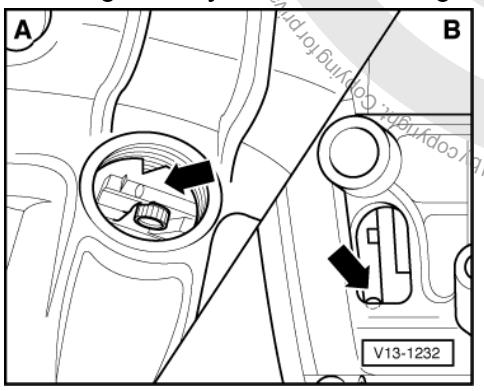

Protected by copyright. Copying for private or commercial purposes, in part or in whole, is not permitted unless authorised by Volkswagen AG. Volkswagen AG does not guarantee or accept any liability with respect to the correctness of information in this document. Copyright by Volkswagen AG.
satelettronica

- -> Set flywheel -A- or drive plate -B- to TDC No. 1 cylinder.

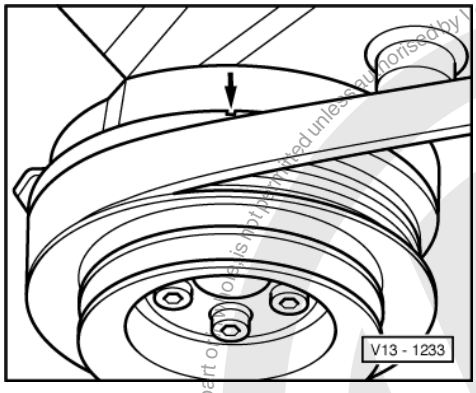

Engine removed

- -> Set vibration damper (V-belt pulley) to TDC No. 1 cylinder.

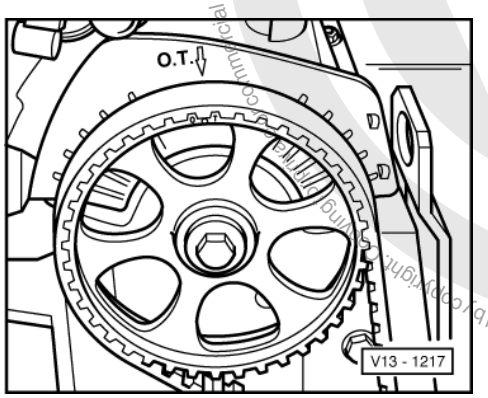

- -> Mark on camshaft sprocket must align with arrow on cylinder head.

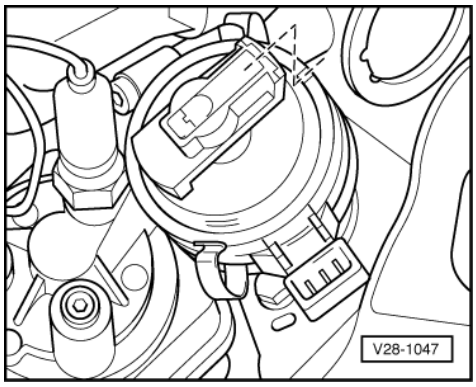

- -> Mark on distributor must align with mark on rotor arm or Hall sender cover.

Removing and installing distributor

Test conditions

- Crankshaft and camshaft in No. 1 cylinder TDC position

Protected by copyright. Copying for private or commercial purposes, in part or in whole is not permitted unless authorised by Volkswagen AG. Volkswagen AG does not guarantee or accept any liability with respect to the correctness of information in this document. Copyright by Volkswagen AG.
satelettronica

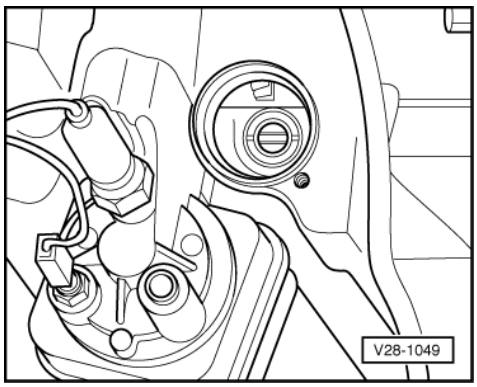

- -> Before installing the distributor align oil pump shaft drive tongue parallel to crankshaft.

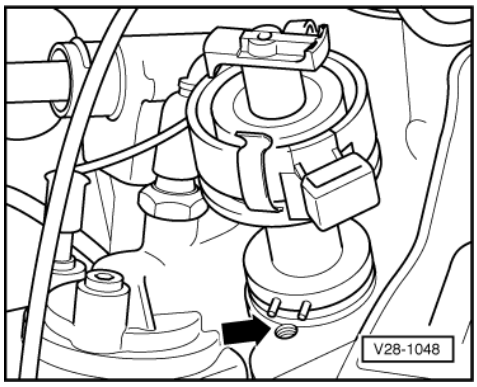

- -> Install distributor. The pins on the distributor must point towards securing bolt threaded hole -arrow-.

Note:

When installing, turn rotor arm slightly right of the distributor marking. When inserting the rotor arm will turn back onto the marking.

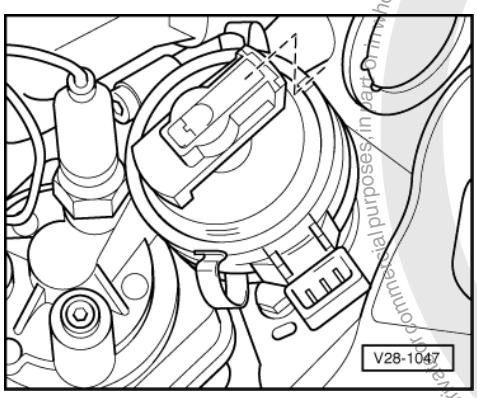

- -> Mark on distributor must align with mark on rotor arm or Hall sender cover.
- Tighten distributor securing bolt.
  Tightening torque: 25 Nm

If no alignment of the markings can be achieved:

- Loosen tensioning roller and take toothed belt off camshaft sprocket.

Protected by copyright. Copying for private or commercial purposes, in part or in whole, is not permitted unless authorised by Volkswagen AG. Volkswagen AG does not guarantee or accept any liability with respect to the correctness of information in this document. Copyright by Volkswagen AG.
satelettronica

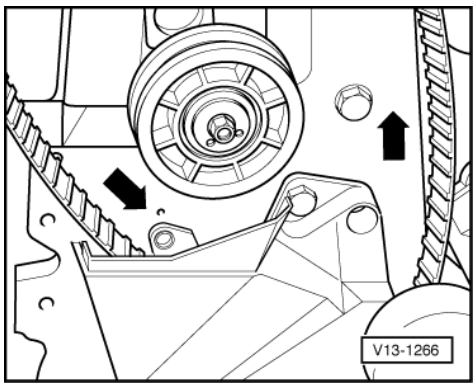

- -> Turn intermediate shaft sprocket with toothed belt so long in direction of arrow until rotor arm aligns with markings for No. 1 cylinder on distributor housing (toothed belt slides over crankshaft sprocket).

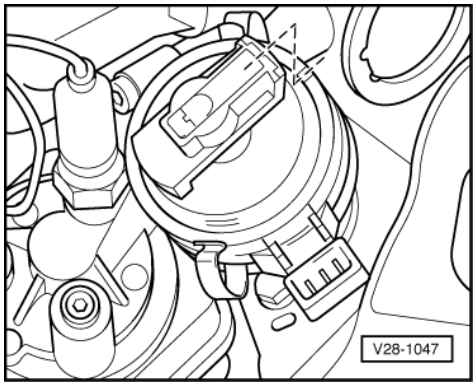

- -> Mark on distributor must align with mark on rotor arm or Hall sender cover.

- Place toothed belt on tensioning roller and camshaft sprocket.

Note:

For easier installation of the toothed belt loosen tensioner roller lock nut only approx. one thread.

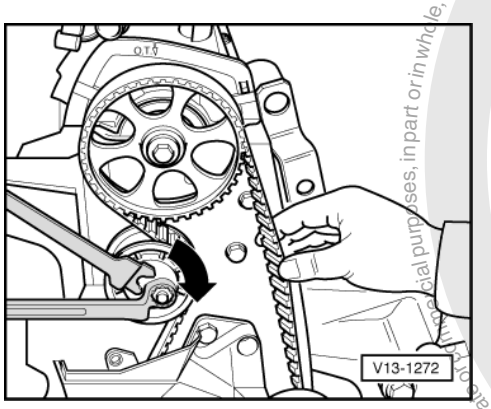

- -> Tension toothed belt, to do this turn tensioner with pin wrench (e.g. Matra V159) in direction of arrow.

It must just be possible to turn the toothed belt through 90° with the thumb and forefinger in the centre between camshaft and intermediate shaft sprockets.

- Tighten tensioner lock nut.
  Tightening torque: 45 Nm
- Rotate crankshaft two full turns and check adjustment.
- Check distributor housing and rotor arm markings.
- Install upper toothed belt protective cover.
- Before fitting, clean distributor cap and check for cracks and signs of tracking, renew if necessary.

satelettronica
Protected by copyright. Copyright by Volkswagen AG.
Copyright by Volkswagen AG. Volkswagen AG does not guarantee or accept any liability with respect to the correctness of information in this document.
Copy or paste of this document, in part or in whole, is not permitted unless authorised by Volkswagen AG.

1.7 - Checking ignition timing control

Special tools, testers and auxiliary items

- Ignition tester V.A.G 1767 or V.A.G 1367 with HT pick-up clamp V.A.G 1367/8

Check conditions

- No fault stored in fault memory
- Engine oil temperature at least 80 °C

Test sequence

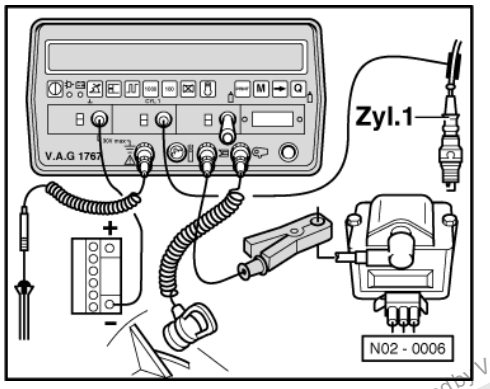

- -> Connect ignition tester V.A.G 1767 or ignition tester V.A.G 1367 with HT pick-up clamp V.A.G 1367/8.
- Start engine and run at idling speed.
- Set ignition tester to 4000 rpm.
- Slowly increase speed to slightly above 4000 rpm until the ignition timing (advance figure) is displayed.
  Specification: 25...35 ° before TDC

If the specification is not obtained:

- Renew Simos control unit (J361)
  =>Page 25 , item 9 .

1.8 - Checking Hall sender

Special tools, testers and auxiliary items

- Test box V.A.G 1598/18
- Hand multimeter V.A.G 1526 or multimeter V.A.G 1715
- Adapter set V.A.G 1594
- Current flow diagram

Test conditions

- Sender fault is recognised by self diagnosis

Test sequence

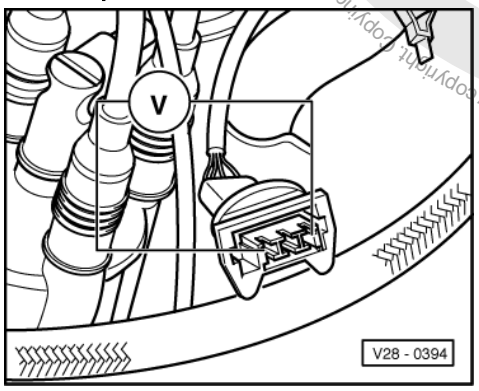

Protected by copyright. Copying for private or commercial purposes, in part or in whole, is not permitted unless authorised by Volkswagen AG. Volkswagen AG does not guarantee or accept any liability with respect to the correctness of information in this document. Copyright by Volkswagen AG.
satelettronica

- Pull plug off sender (distributor).
- -> Connect multimeter to measure voltage with aux. cables from V.A.G 1594 to the outer contacts of the plug.
- Switch on ignition.
  Specification: At least 10 V
- Switch off ignition.

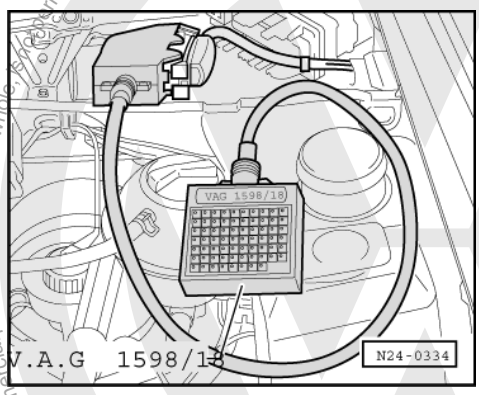

- -> Connect test box V.A.G 1598/18 to control unit wiring loom.

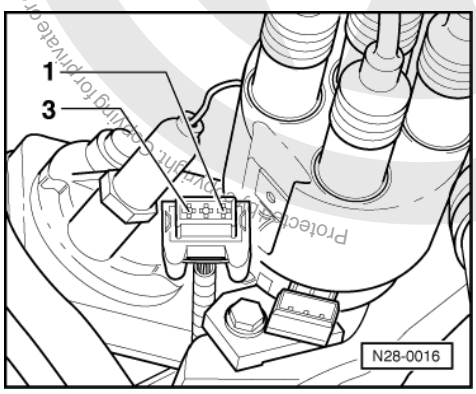

- -> Check wiring between test box and 3 pin connector for open circuit according to current flow diagram.
  Contact 1+socket 35
  Contact 2+socket 44
  Contact 3+socket 45
  Wire resistance: Max. 1.5 ω
- Additionally check wires for short to one another.
  Contact 3+socket 44
  Contact 3+socket 35
  Contact 2+socket 35
  Specification: ∞ω

If no wiring fault is detected and voltage was present between contacts 1+3:

- Renew distributor with Hall sender
  =>Page 76 , Item 15 .

If no wiring fault is detected and no voltage was present between contacts 1+3:

- Renew Simos control unit (J361)
  =>Page 25 , item 9 .

1.9 - Checking knock sensor

Special tools, testers and auxiliary items

- Test box V.A.G 1598/18
- Hand multimeter V.A.G 1526 or multimeter V.A.G 1715

Volkswagen AG. Volkswagen AG does not guarantee or accept any liability with respect to the correctness of information in this document. Copyright by Volkswagen AG.
Protected by copyright. Copying for private or commercial purposes, in part or in whole, is not permitted unless authorised by Volkswagen AG.
satelettronica

- Adapter set V.A.G 1594
- Current flow diagram

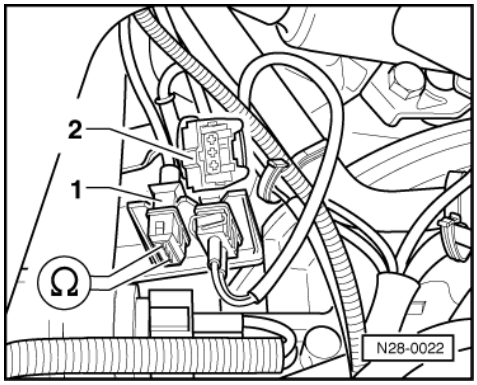

Test sequence

- -> Separate blue 3 pin connector -2- to knock sensor 1 (G61) -1-.
- Connect multimeter with aux. cables from V.A.G 1594 to measure resistance at contacts 1+2, 1+3 and 2+3 on connector to knock sensor.
  Specification ∞ω

If the specification is attained:

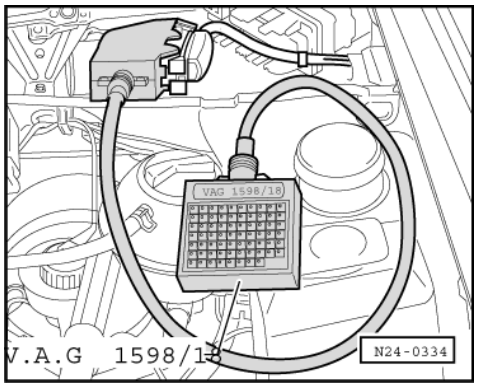

- -> Connect test box V.A.G 1598/18 to control unit wiring loom.

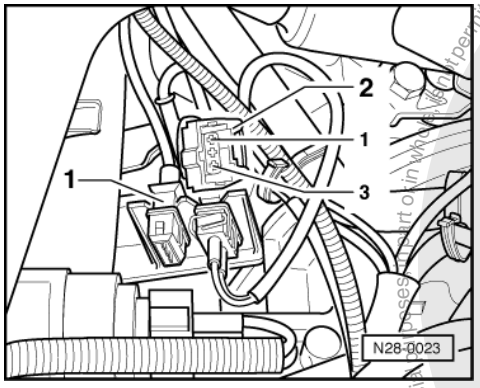

- -> Check wiring between test box and 3 pin connector for open circuit according to current flow diagram.
  Contact 1+socket 36
  Contact 2+socket 34
  Contact 3+socket 09
  Wire resistance: Max. 1.5 ω
- Additionally check wires for short to one another.
  Contact 3+socket 34
  Contact 3+socket 36
  Contact 2+socket 36

Protected by copyright. Copying for private or commercial purposes, in part or in whole, is not permitted unless authorised by Volkswagen AG. Volkswagen AG does not guarantee or accept any liability with respect to the correctness of information in this document. Copyright by Volkswagen AG.
satelettronica

Specification: ∞ω

If no wiring fault is detected:

- Loosen knock sensor and tighten again to 20 Nm.
- Carry out test drive.

  During the road test the following operating conditions must be fulfilled:
  - The coolant temperature must exceed 80 °C .
  - When the temperature is reached, the operating conditions
    Idling
    Part throttle
    Full throttle
    Overrun
    must be attained several times.
  - At full throttle the speed must exceed 3500 rpm.

- Again interrogate the control unit fault memory.

If the fault is still present:

- Replace knock sensor (G61) =>Page 74 , item 7 .

1.10 - Checking ignition transformer and output stage

Special tools, testers and auxiliary items

- Test box V.A.G 1598/18
- Hand multimeter V.A.G 1526 or multimeter V.A.G 1715
- Adapter set V.A.G 1594
- Diode test lamp V.A.G 1527
- Current flow diagram

Check conditions

- Hall sender OK.

Checking ignition transformer

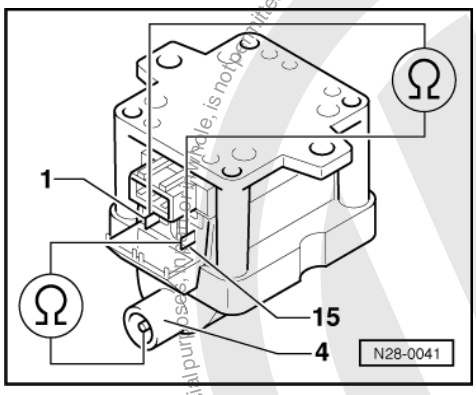

- Pull connector and H.T. cable off ignition transformer (N152).
- -> Check primary resistance between terminals 1 and 15.
  Specification: 0.5...1.5 ω
- Check secondary resistance between terminals 4 and 15.
  Specification: 2.5...4 kω

If the specifications are not attained:

- Replace ignition transformer => Page 74 , item 4 .

Protected by copyright. Copying for private or commercial purposes, in any form or medium, is not permitted unless authorised by Volkswagen AG. Volkswagen AG does not guarantee or accept any liability with respect to the correctness of information in this document. Copyright by Volkswagen AG.
satelettronica

Protected by copyright. Copyright by Volkswagen AG. Volkswagen AG does not guarantee or accept any liability with respect to the correctness of information in this document. Copyright by Volkswagen AG. Not to be republished, in part or in whole, without written permission.

Checking voltage supply

- Pull 3 pin connector off ignition transformer.

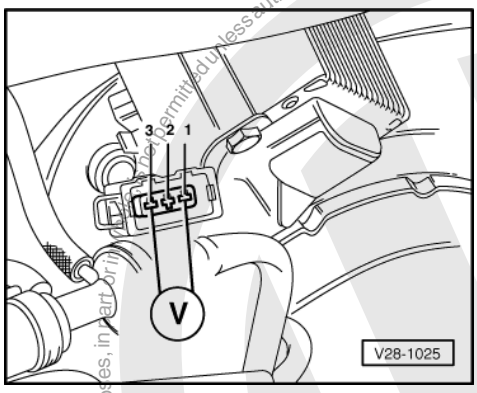

- -> Connect multimeter to measure voltage using aux. cables from V.A.G 1594 to the contacts 1+3 of the disconnected connector.
- Switch ignition on.
  Specification: at least 11 V

If no voltage is present:

- Switch off ignition.
- Check wire between 3 pin connector contact 1 and earth for open circuit according to current flow diagram.
  Wire resistance: Max. 1.5 ω
- Check wire between 3 pin connector contact 3 and relay plate for open circuit according to current flow diagram.
  Wire resistance: Max. 1.5 ω

Checking activation

- Pull connector off injectors.

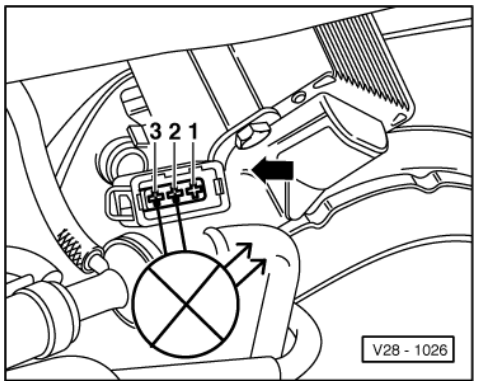

- -> Connect diode test lamp V.A.G 1527 using aux. cables from V.A.G 1594 and adapters V.A.G 1594/15 to contacts 2+3 of the connector.
- Operate starter and check ignition signal from Motronic control unit.
  LED must flicker

The LED does not flicker:

satelettronica

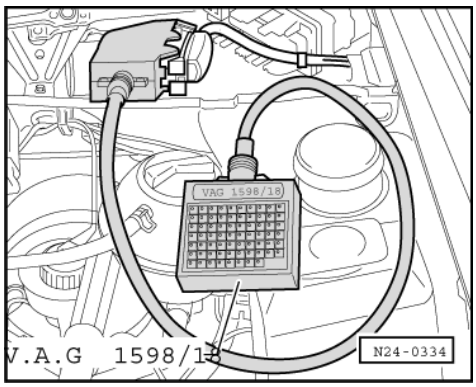

- -> Connect test box V.A.G 1598/18 to control unit wiring loom.
- Check wire between test box socket 7 and 3 pin connector contact 2 for open circuit according to current flow diagram.
  Wire resistance: Max. 1.5 ω
- Additionally check wires for short to one another.
  Specification: ∞ω

If no wiring fault is detected and voltage was present between contacts 1+3:

- Renew Simos control unit (J361)
  =>Page 25 , item 9 .

If the voltage supply and activation is OK.:

- Connect 3 pin connector and H.T. cable to ignition transformer.

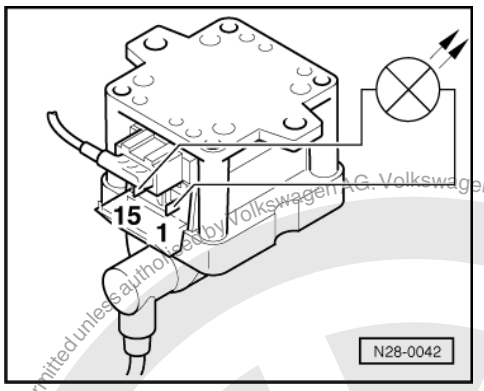

- -> Connect diode test lamp using aux. cables and clamps to the contacts 1 and 15 on ignition transformer.

Warning! During the following test do not touch the terminals of the ignition transformer or test cables.

- Operate starter.
  The LED must flicker

satelettronica
Protected by copyright. Copying for private or commercial purposes, in part or in whole, is not permitted unless authorised by Volkswagen AG. Volkswagen AG does not guarantee or accept any liability with respect to the correctness of information in this document. Copyright by Volkswagen AG.